THERMIS MĚŘÍCÍ A REGULAČNÍ TECHNIKA

THERMIS, spol. s r.o.

Mateří 14, Brno, Czech Republic

www.thermis.cz

HYDRAULIKA

VENTILY

KOHOUTY

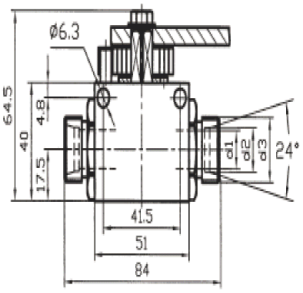

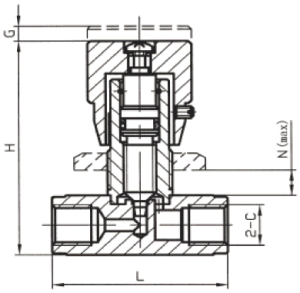

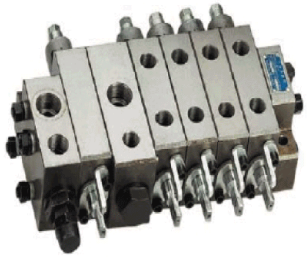

Bolev

CONTENT:

A.Hydraulic valves

A.1. KHB- hydraulic pressure two-way ball valve
A.2. KHB3K- hydraulic pressure three-way ball valve
A.3. VH2V- high pressure ball valve
A.4. VH3V- three way high pressure ball valve
A.5. KH*B- high pressure stainless steel ball valve
A.6. BKH- ball valve with SAE joint
A.7. KHBF(KHMF)- flange ball valve
A.8. KHP(PKH)- two-way ball valve for manifold mounting
A.9. BEH-SAE, KHSAE210- flange ball valve– SAE
A.10. BME- stainless steel ball valve
A.11. DKHB- mining ball valve
A.12. DASH- ball valve with DASH joint
A.13. KP-XC13- spring ball valve
A.14. LLP07- ball valve with filter
A.15. KHB- ball valve with phneumatic accutors
A.16. CJZQ- high pressure ball valve
A.17. YJZQ- high pressure ball valve
A.18. YQ- high pressure closing valve
A.19. QJH- high pressure globe stop valve
A.20. AJS, AJD- hydraulic accumulator safety valve unit
A.21. AQF- hydraulic accumulator safety ball valve
A.22. QDF, QDF-4- ball solenoid safety valve

B.Stop valves

B.1. YJF, JZF- high pressure stop valve
B.2. JZF-T, JZF-G- high pressure stop valve
B.3. KF- pressure gauge switch

C.One-way valves

C.1. A-series- one-way valve
C.2. S-series- one-way valve
C.3. V-series- one-way valve
C.4. BLV-BFD, BLV-DBFD- counter balance valve BLV-BFD 10/35, BLV-DBFD 10/35
C.5. SF- shuttle valve
C.6. VU/SF- shuttle valve

D.Throttle valve

D.1. STU- throttle check valve
D.2. STB- throttle valve

E.Hydraulic check valve

E.1. QY8C, QY16A- single pilot operating check valve
E.2. DPOCV, SO-H10L-02- dual pilot operating check valve
E.3. dual pilot operating check valves- YS6 ,YSS-6,F42,BQ2201
E.4. 23SHX-06- two position hydraulic hand control valve
E.5. SQ1-121, Q-series, QY8C-091-5- balance valve

F.Distributor valves

F.1. DL8, DLL8CYF,DPC26A/5,QYZP20/10- multiple directional control valve

G.Cartridge valve

G.1. CYF- cartridge overflow valve
G.2. XYF- cartridge unloading relief valve

H.Safety valves

H.1. GY16-E-1235 , Q84-1254 – safety valves, DFZ2, SDIF-C20A – double check valve, DFZ3- three joint check valve
H.2. QY25D-1271-2 constant flow safety valve, QY12A-1245 –gyration valve group, QY20-129A- control sequence
H.3. SXYF – unload overflow valve unit, YXF-L10 – unloading valve unit, HFS10 – buffer valve, YLBJ-6 – pressure alarm
H.4. QKF6 – assembled control valve, XZ – rotary joint, QXF-5 – change valve
H.5. YS-8H, T5106124 - oil filters

KHB
Hydraulic pressure two-way ball valve

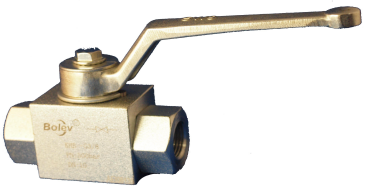

Specification:
Hydraulic two-way ball valves are used mainly for distribution of hydraulic liquids as a closing element. The ball valve is made of steel or stainless steel, ball material is nickel-plated steel or stainless steel.

Model code:

KHB -- M27x1,5 -- 1 1 1 2 01 X -- *

1 2 3 4 5 6 7 8 9

1. series code KHB
2. joint code: Gxx (G thread), xxLR (light), xxSR (heavy)
3. valve body material: 1-steel, 2-stainless steel
4. ball body material: 1-steel, 2-brass, 3-stainless steel
5. operating temperature: -25~+100°C, -30~+170°C
6. other airproof: 2-NBR, 4-FPM
7. handle type: 01-aluminium straight handle, 02-aluminium crooked handle, 03-casting zinc straight handle, 04-casting zinc crooked handle, 05-steel straight handle, 06-steel crooked handle, 09-without handle
8. Design number: to be decided by the manufacturer
9. Surface disposal: phosphoric polish, electroplated zinc

Symbol:

Drawing:

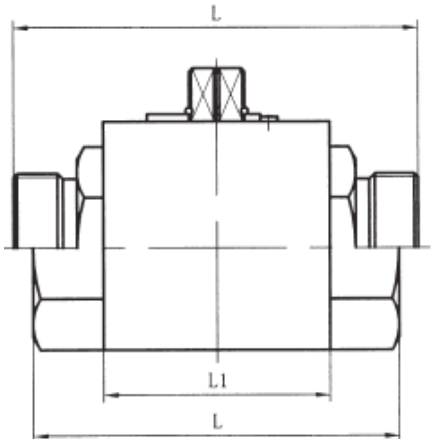

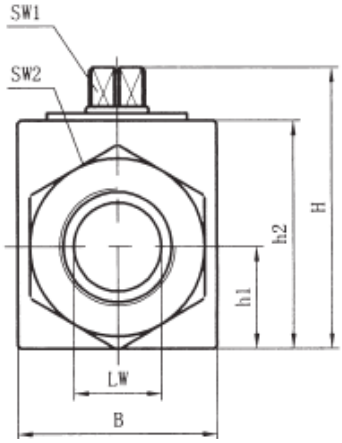

Thermis, spol. s r.o.
Mateří 14
614 00 Brno
Czech Republic

Tel: +420 545 226 177-184
Fax: +420 545 226 177, 181
E-mail: info@thermis.cz
www.thermis.cz

IČ: 26 88 36 43
DIČ: CZ 26 88 36 43
KOS v Brně, oddíl C, vložka 43349
Komerční banka Brno – Černá Pole

Dimensions:

G/BSP

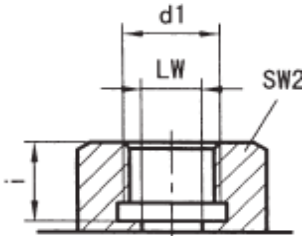

NPT

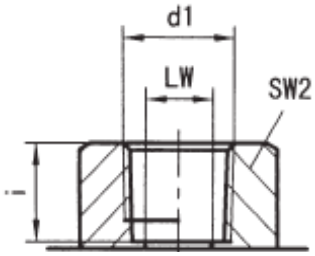

LR - light

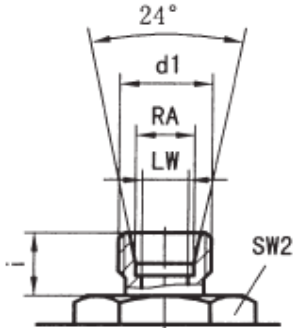

SR - heavy

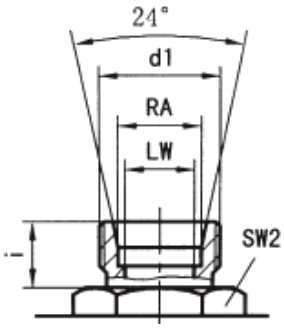

Type	PN(bar)	DN	LW	RA	d1	i	L	L1	B	H	h1	h2	SW1	SW2
KHB-G1/8	500	04	06	_	G1/8	10	69	40	26	45	13,5	33	09	22
KHB-G1/4	500	06	06	_	G1/4	14	69	40	26	45	13,5	33	09	22
KHB-G3/8	500	10	10	_	G3/8	14	72	42	32	49	16	36	09	27
KHB-G1/2	500	13	12	_	G1/2	16	83	48	35	49	17	40	09	30
KHB-G1/2	400	16	15	_	G1/2	16	83	48	38	61	19	45	09	32
KHB-G3/4	315	20	20	_	G3/4	18	95	60	48	70	25	55	12	41
KHB-G1	315	25	25	_	G1	21	113	65	57	79	28,5	64	12	50
KHB-G1 1/4	315	32	32	_	G1 1/4	22	110	84	75	101	37,5	84	14	60
KHB-G1 1/2	315	40	38	_	G1 1/2	24	130	91	85	112	42,5	95	14	70
KHB-G2	315	50	48	_	G2	26	140	100	105	131	52,5	112	14	80
Type	PN(bar)	DN	LW	RA	d1	i	L	L1	B	H	h1	h2	SW1	SW2
KHB-NPT1/8	500	04	06	_	NTP1/8	10	69	40	26	45	13,5	33	09	22
KHB-NTP1/4	500	06	06	_	NTP1/4	14	69	40	26	45	13,5	33	09	22
KHB-NTP3/8	500	10	10	_	NTP3/8	14	72	42	32	49	16	36	09	27
KHB-NPT1/2	500	13	12	_	NTP1/2	16	83	48	35	49	17	40	09	30
KHB-NPT1/2	400	16	15	_	NTP1/2	16	83	48	38	61	19	45	09	32
KHB-NPT3/4	315	20	20	_	NTP3/4	18	95	60	48	70	25	55	12	41
KHB-NTP1	315	25	25	_	NTP1	21	113	65	57	79	28,5	64	12	50
KHB-NPT1 1/4	315	32	32	_	NTP1 1/4	22	110	84	75	101	37,5	84	14	60
KHB-NPT1 1/2	315	40	38	_	NTP1 1/2	24	130	91	85	112	42,5	95	14	70
KHB-NTP2	315	50	48	_	NTP2	26	140	100	105	131	52,5	112	14	80
Type	PN(bar)	DN	LW	RA	d1	i	L	L1	B	H	h1	h2	SW1	SW2
KHB-06LR	500	04	04	06	M12x1,5	10	67	40	26	45	13,5	33	09	22
KHB-08LR	500	06	06	08	M14x1,5	10	67	40	26	45	13,5	33	09	22
KHB-10LR	500	08	08	10	M16x1,5	11	74	42	32	49	16	36	09	27
KHB-12LR	500	10	10	12	M18x1,5	11	74	42	32	49	16	36	09	27
KHB-15LR	500	13	12	15	M22x1,5	12	82	48	35	53	17	40	09	30
KHB-15LR	500	12	12	15	M22x1,5	12	82	48	38	61	19	45	09	32
KHB-18LR	500	13	12	18	M26x1,5	12	82	48	35	53	17	40	09	30
KHB-18LR	400	16	15	18	M26x1,5	12	82	48	38	61	19	45	09	32
KHB-22LR	315	20	19	22	M30x2	14	101	60	48	70	25	55	12	41
KHB-28LR	315	25	24	28	M36x2	14	108	65	57	79	28,5	64	12	50
KHB-35LR	315	32	30	35	M45x2	16	141	84	75	101	37,5	84	14	60
KHB-42LR	315	40	36	42	M52x2	16	162	91	85	112	42,5	95	14	70
Typ	PN(bar)	DN	LW	RA	d1	i	L	L1	B	H	h1	h2	SW1	SW2
KHB-08SR	500	04	05	08	M16x1,5	12	73	40	26	45	13,5	33	09	22
KHB-10SR	500	06	06	10	M18x1,5	12	73	40	26	45	13,5	33	09	22
KHB-12SR	500	08	08	12	M20x1,5	12	76	42	32	49	16	36	09	27
KHB-14SR	500	10	10	14	M22x1,5	14	80	42	32	49	16	36	09	27
KHB-16SR	500	13	12	16	M24x1,5	14	86	48	35	53	17	40	09	30
KHB-16SR	500	12	12	16	M24x1,5	14	86	48	38	61	19	45	09	32
KHB-20SR	500	13	12	20	M30x2	16	90	48	35	53	17	40	09	30
KHB-20SR	400	16	15	20	M30x2	16	90	48	38	61	19	45	09	32
KHB-25SR	315	20	20	25	M36x2	18	109	60	48	70	25	55	12	41
KHB-30SR	315	25	25	30	M42x2	20	120	65	57	79	28,5	64	12	50
KHB-38SR	315	32	30	38	M52x2	22	153	84	75	101	37,5	84	14	60

Thermis, spol. s r.o.
Mateří 14
614 00 Brno
Czech Republic

Tel: +420 545 226 177-184
Fax: +420 545 226 177, 181
E-mail: info@thermis.cz
www.thermis.cz

IČ: 26 88 36 43
DIČ: CZ 26 88 36 43
KOS v Brně, oddíl C, vložka 43349
Komerční banka Brno – Černá Pole

Bolev

KHB3K
Hydraulic three-way ball valve

Specifikace:
Hydraulic two-way ball valves are used mainly for distribution of hydraulic liquids as a closing fitting. The ball valve is made of steel or stainless steel, the ball material is nickel-plated steel or stainless steel. They are produced in two designs – opened „T“ or closed „L“. while using „L“ type, middle position means „all closed“, range of handle turn is 90°. while using „T“ type, middle position means „all connected“, range of handle turn is 180°.

Model code:

KHB3K -- M2x1,5 -- 1 1 1 2 01 X -- *

1 2 3 4 5 6 7 8 9

1. series code: KHB3K
2. joint code: Gxx (G thread), xxLR (light), xxSR (heavy)
3. valve body material: 1-steel, 2-stainless steel
4. ball body material: 1-steel, 2-brass, 3-stainless steel
5. operating temperature: -25~+100°C, -30~+170°C
6. other airproof: 2-NBR, 4-FPM
7. handle type: 01-aluminium straight handle, 02-aluminium crooked handle, 03-zinc casting straight handle, 04-zinc casting crooked handle, 05-steel straight handle, 06-steel crooked handle, 09-without handle
8. design number: to be decided by the manufacturer
9. surface disposal: phosphoric polish, electroplated zinc

Symbol:

Drawing:

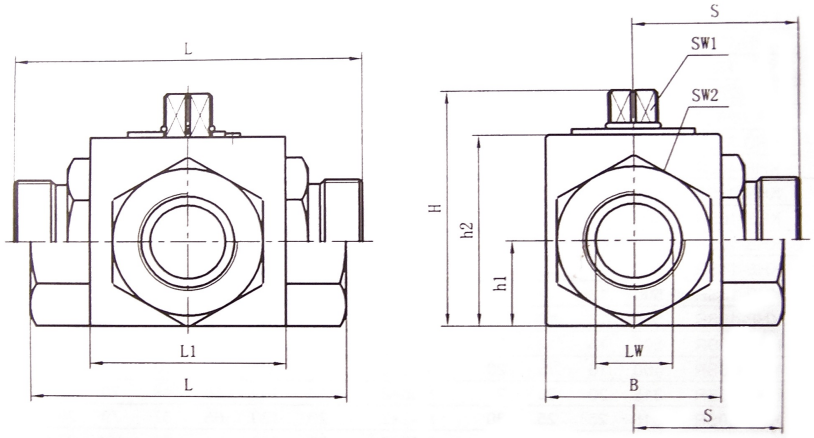

Thermis, spol. s r.o.
Mateří 14
614 00 Brno
Czech Republic

Tel: +420 545 226 177-184
Fax: +420 545 226 177, 181
E-mail: info@thermis.cz
www.thermis.cz

IČ: 26 88 36 43
DIČ: CZ 26 88 36 43
KOS v Brně, oddíl C, vložka 43349
Komerční banka Brno – Černá Pole

Dimensions:

G/BSP

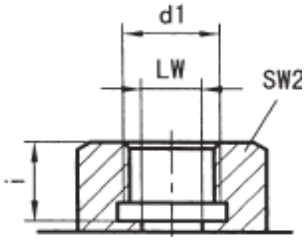

NPT

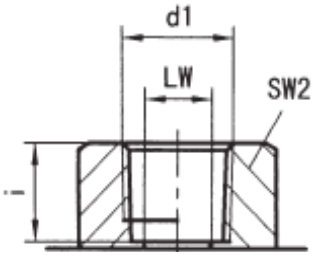

LR - light

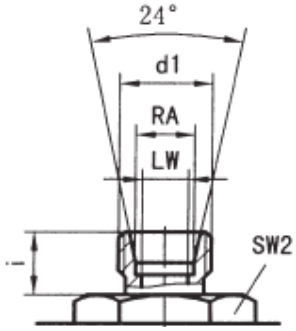

SR - heavy

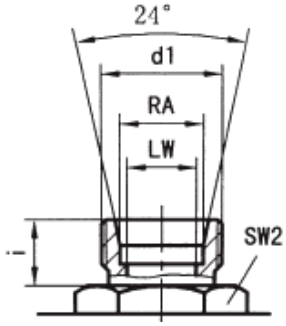

Type	PN(bar)	DN	LW	RA	d1	i	L	L1	B	H	h1	h2	SW1	SW2	S
KHB3K-G1/8	500	04	06	_	G1/8	10	69	40	26	45	13,5	33	09	22	35
KHB3K-G1/4	500	06	06	_	G1/4	14	69	40	26	45	13,5	33	09	22	35
KHB3K-G3/8	500	10	10	_	G3/8	14	72	42	32	49	16	36	09	27	36
KHB3K-G1/2	500	13	12	_	G1/2	16	83	48	35	49	17	40	09	30	40
KHB3K-G1/2	400	16	15	_	G1/2	16	83	48	38	61	19	45	09	32	42
KHB3K-G3/4	315	20	20	_	G3/4	18	95	60	48	70	25	55	12	41	49
KHB3K-G1	315	25	25	_	G1	21	113	65	57	79	28,5	64	12	50	56,5
KHB3K-G1 1/4	315	32	32	_	G1 1/4	22	110	84	75	101	37,5	84	14	60	62,5
KHB3K-G1 1/2	315	40	38	_	G1 1/2	24	130	91	85	112	42,5	95	14	70	61
KHB3K-G2	315	50	48	_	G2	26	140	100	105	131	52,5	112	14	80	62,5
Type	PN(bar)	DN	LW	RA	d1	i	L	L1	B	H	h1	h2	SW1	SW2	S
KHB3K-NPT1/8	500	04	06	_	NTP1/8	10	69	40	26	45	13,5	33	09	22	35
KHB3K-NTP1/4	500	06	06	_	NTP1/4	14	69	40	26	45	13,5	33	09	22	35
KHB3K-NTP3/8	500	10	10	_	NTP3/8	14	72	42	32	49	16	36	09	27	36
KHB3K-NPT1/2	500	13	12	_	NTP1/2	16	83	48	35	49	17	40	09	30	40
KHB3K-NPT1/2	400	16	15	_	NTP1/2	16	83	48	38	61	19	45	09	32	42
KHB3K-NPT3/4	315	20	20	_	NTP3/4	18	95	60	48	70	25	55	12	41	49
KHB3K-NTP1	315	25	25	_	NTP1	21	113	65	57	79	28,5	64	12	50	56,5
KHB3K-NPT1 1/4	315	32	32	_	NTP1 1/4	22	110	84	75	101	37,5	84	14	60	62,5
KHB3K-NPT1 1/2	315	40	38	_	NTP1 1/2	24	130	91	85	112	42,5	95	14	70	61
KHB3K-NTP2	315	50	48	_	NTP2	26	140	100	105	131	52,5	112	14	80	62,5
Type	PN(bar)	DN	LW	RA	d1	i	L	L1	B	H	h1	h2	SW1	SW2	S
KHB3K-06LR	500	04	04	06	M12x1,5	10	67	40	26	45	13,5	33	09	22	33,5
KHB3K-08LR	500	06	06	08	M14x1,5	10	67	40	26	45	13,5	33	09	22	33,5
KHB3K-10LR	500	08	08	10	M16x1,5	11	74	42	32	49	16	36	09	27	37
KHB3K-12LR	500	10	10	12	M18x1,5	11	74	42	32	49	16	36	09	27	37
40KHB3K-15LR	500	13	12	15	M22x1,5	12	82	48	35	53	17	40	09	30	40
KHB3K-15LR	500	12	12	15	M22x1,5	12	82	48	38	61	19	45	09	32	40
KHB3K-18LR	500	13	12	18	M26x1,5	12	82	48	35	53	17	40	09	30	42
KHB3K-18LR	400	16	15	18	M26x1,5	12	82	48	38	61	19	45	09	32	42
KHB3K-22LR	315	20	19	22	M30x2	14	101	60	48	70	25	55	12	41	52
KHB3K-28LR	315	25	24	28	M36x2	14	108	65	57	79	28,5	64	12	50	54
KHB3K-35LR	315	32	30	35	M45x2	16	141	84	75	101	37,5	84	14	60	66
KHB3K-42LR	315	40	36	42	M52x2	16	162	91	85	112	42,5	95	14	70	78
Type	PN(bar)	DN	LW	RA	d1	i	L	L1	B	H	h1	h2	SW1	SW2	S
KHB3K-08SR	500	04	05	08	M16x1,5	12	73	40	26	45	13,5	33	09	22	37
KHB3K-10SR	500	06	06	10	M18x1,5	12	73	40	26	45	13,5	33	09	22	37
KHB3K-12SR	500	08	08	12	M20x1,5	12	76	42	32	49	16	36	09	27	38
KHB3K-14SR	500	10	10	14	M22x1,5	14	80	42	32	49	16	36	09	27	40
KHB3K-16SR	500	13	12	16	M24x1,5	14	86	48	35	53	17	40	09	30	44
KHB3K-16SR	500	12	12	16	M24x1,5	14	86	48	38	61	19	45	09	32	43,5
KHB3K-20SR	500	13	12	20	M30x2	16	90	48	35	53	17	40	09	30	44
KHB3K-20SR	400	16	15	20	M30x2	16	90	48	38	61	19	45	09	32	45,5
KHB3K-25SR	315	20	20	25	M36x2	18	109	60	48	70	25	55	12	41	56
KHB3K-30SR	315	25	25	30	M42x2	20	120	65	57	79	28,5	64	12	50	60
KHB3K-38SR	315	32	30	38	M52x2	22	153	84	75	101	37,5	84	14	60	72

Thermis, spol. s r.o.
Mateří 14
614 00 Brno
Czech Republic

Tel: +420 545 226 177-184
Fax: +420 545 226 177, 181
E-mail: info@thermis.cz
www.thermis.cz

IČ: 26 88 36 43
DIČ: CZ 26 88 36 43
KOS v Brně, oddíl C, vložka 43349
Komerční banka Brno – Černá Pole

Bolev

VH2V
High pressure ball valve

Specification:
Hydraulic two-way ball valves are used mainly for distribution of hydraulic liquids as a closing fitting. Theball valve is made of steel or stainless steel, the ball material is nickel-plated steel or stainless steel. Mounting onto the flange or by srews.

Model code:

VH2V	--	M27x1,5	--	1	1	1	2	01	X	--	*
1		2		3	4	5	6	7	8		9

1. series code: VH2V
2. joint code: Gxx (G thread), xxLR (light, xxSR (heavy)
3. valve body material: 1-steel, 2-stainless steel
4. ball body material: 1-steel, 2-brass, 3-stainless steel
5. operating temperature: 1. -25~+100°C, 2. -30~+170°C
6. other airproof: 2-NBR, 4-FPM
7. handle type: 01-aluminium straight handle, 02-aluminium crooked handle, 03-zinc casting straight handle, 04-zinc casting crooked handle, 05-steel straight handle, 06-steel crooked handle, 09-without handle
8. design number: to be decided by the manufacturer
9. surface disposal: phosphoric polish, electroplated zinc

Symbol:

Drawing:

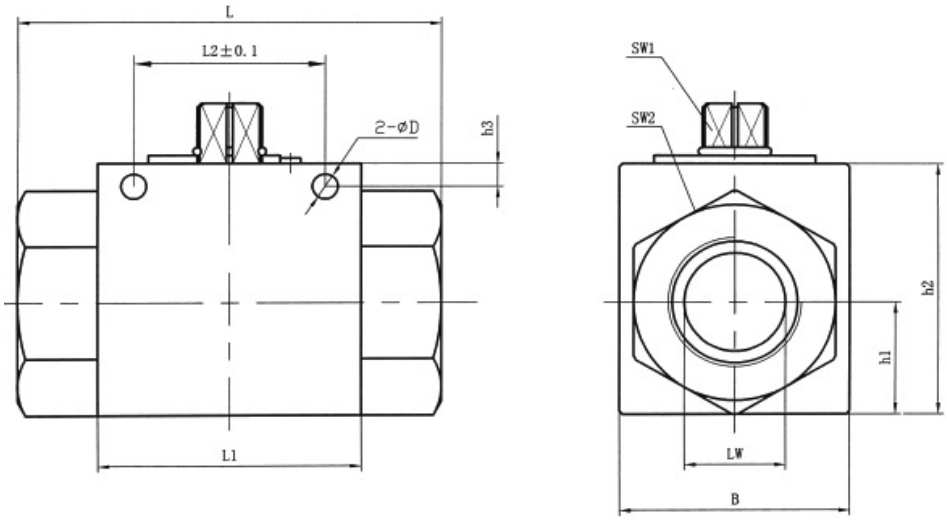

Thermis, spol. s r.o.
Mateří 14
614 00 Brno
Czech Republic

Tel: +420 545 226 177-184
Fax: +420 545 226 177, 181
E-mail: info@thermis.cz
www.thermis.cz

IČ: 26 88 36 43
DIČ: CZ 26 88 36 43
KOS v Brně, oddíl C, vložka 43349
Komerční banka Brno – Černá Pole

Dimensions:

G/BSP

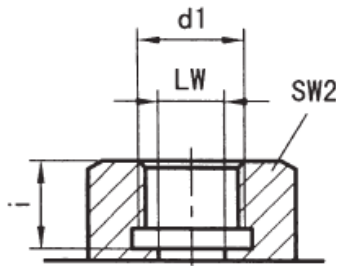

Type	PN(bar)	DN	LW	RA	d1	i	L	L1	B	L2	h1	h2	SW1	SW2	D	h3
VH2V-G1/4	500	06	06	/	G1/4	14	69	40	26	31,5	13,5	35	09	22	4,5	4,8
VH2V-G3/8	500	10	10	/	G3/8	14	72	42	32	31,5	16	40	09	27	5,3	5,8
VH2V-G1/2	500	13	12	/	G1/2	16	83	48	35	38,5	18	45	09	30	6,5	6
VH2V-G3/4	400	20	20	/	G3/4	18	93	60	50	48,5	23	58	12	41	6,5	6
VH2V-G1	350	25	25	/	G1	21	115	65	57	50,5	27,5	65	12	46	8,5	7

NPT

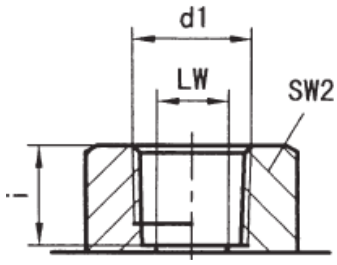

Type	PN(bar)	DN	LW	RA	d1	i	L	L1	B	L2	h1	h2	SW1	SW2	D	h3
VH2V-NPT1/4	500	06	06	/	NPT1/4	14	69	40	26	31,5	13,5	35	09	22	4,5	4,8
VH2V-NPT3/8	500	10	10	/	NPT3/8	14	72	42	32	31,5	16	40	09	27	5,3	5,8
VH2V-NPT1/2	500	13	12	/	NPT1/2	16	83	48	35	38,5	18	45	09	30	6,5	6
VH2V-NPT3/4	400	20	20	/	NPT3/4	18	95	60	50	48,5	23	58	12	41	6,5	6
VH2V-NPT1	350	25	23	/	NPT1	21	113	65	57	50,5	27,5	65	12	46	8,5	7

LR – light

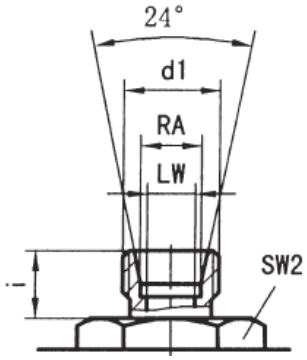

Type	PN(bar)	DN	LW	RA	d1	i	L	L1	B	L2	h1	h2	SW1	SW2	D	h3
VH2V-08LR	500	06	06	08	M14x1,5	10	67	40	26	31,5	13,5	35	09	22	4,5	4,8
VH2V-12LR	500	10	10	12	M18x1,5	11	74	42	32	31,5	16	40	09	27	5,3	5,8
VH2V-15LR	500	13	12	15	M22x1,5	12	82	48	35	38,5	18	45	09	30	6,5	6
VH2V-18LR	500	13	12	18	M26x1,5	12	82	48	35	38,5	18	45	09	30	6,5	6
VH2V-22LR	400	20	19	22	M30x2	14	101	60	50	48,5	23	58	12	41	6,5	6
VH2V-28LR	350	25	24	28	M36x2	14	108	65	57	50,5	27,5	65	12	46	8,5	7

SR – heavy

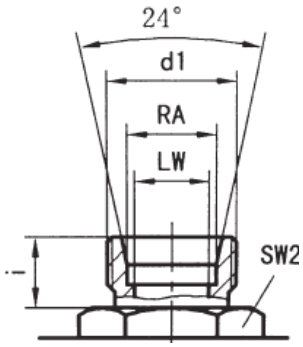

Type	PN(bar)	DN	LW	RA	d1	i	L	L1	B	L2	h1	h2	SW1	SW2	D	h3
VH2V-10SR	500	06	06	10	M18x1,5	12	73	40	26	31,5	13,5	35	09	22	4,5	4,8
VH2V-14SR	500	10	10	14	M22x1,5	14	80	42	32	31,5	16	40	09	27	5,3	5,8
VH2V-16SR	500	13	12	16	M24x1,5	14	86	48	35	38,5	18	45	09	30	6,5	6
VH2V-20SR	500	13	12	20	M30x2	16	90	48	35	38,5	18	45	09	30	6,5	6
VH2V-25SR	400	20	20	25	M36x2	18	109	60	50	48,5	23	58	12	41	6,5	6
VH2V-30SR	350	25	25	30	M42x2	20	120	65	57	50,5	27,5	65	12	46	8,5	7

Thermis, spol. s r.o.
Mateří 14
614 00 Brno
Czech Republic

Tel: +420 545 226 177-184
Fax: +420 545 226 177, 181
E-mail: info@thermis.cz
www.thermis.cz

IČ: 26 88 36 43
DIČ: CZ 26 88 36 43
KOS v Brně, oddíl C, vložka 43349
Komerční banka Brno – Černá Pole

Bolev

VH3V
Three-way high pressure ball valve

Specification:
Hydraulic two-way ball valves are used mainly for distribution of hydraulic liquids as a closing valve.The ball valve is made of steel or stainless steel, the ball material is nickel-plated steel or stainless steel. They are produced in two designs – opened „T“ or closed „L“. while using „L“ type, middle position means „all closed“, range of handle turn is 90°. while using „T“ type, middle position means „all connected“, range of handle turn is 180°. Mounting onto a flange or by screws.

Model code:

VH3V	--	M27x1,5	--	1	1	1	2	01	X	--	*
1		2		3	4	5	6	7	8		9

1. Series code: VH3V
2. joint code: Gxx (G thread), xxLR (light), xxSR (heavy)
3. valve body material: 1-steel, 2-stainless steel
4. ball body material: 1-steel, 2-brass, 3-stainless steel
5. operating temperature: -25~+100°C, -30~+170°C
6. other airproof: 2-NBR, 4-FPM
7. handle type: 01-aluminium straight handle, 02-aluminium crooked handle, 03-zinc casting straight handle, 04-zinc casting crooked handle, 05-steel straight handle, 06-steel crooked handle, 09-without handle
8. design number: to be decided by the manufacturer
9. surface disposal: phosphoric polish, electroplated zinc

Symbol:

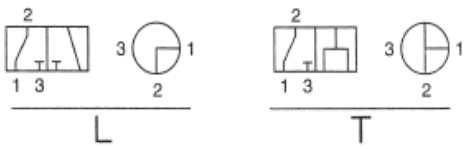

Drawing:

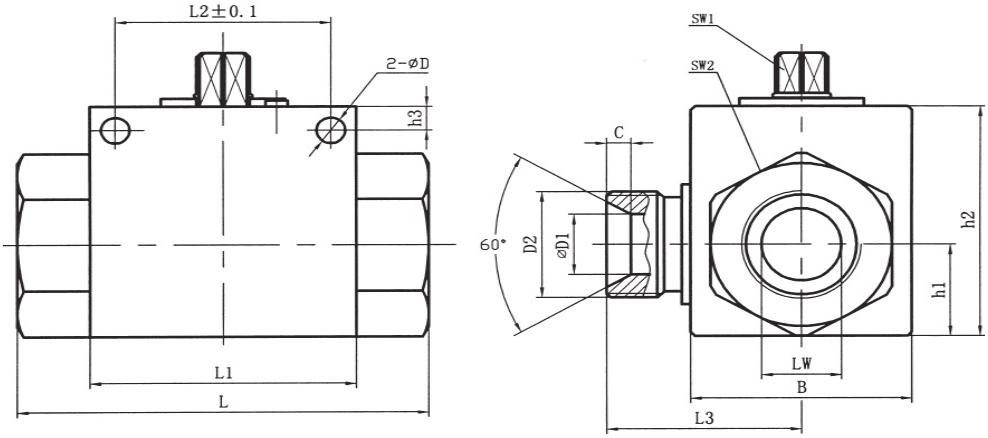

Thermis, spol. s r.o.
Mateří 14
614 00 Brno
Czech Republic

Tel: +420 545 226 177-184
Fax: +420 545 226 177, 181
E-mail: info@thermis.cz
www.thermis.cz

IČ: 26 88 36 43
DIČ: CZ 26 88 36 43
KOS v Brně, oddíl C, vložka 43349
Komerční banka Brno – Černá Pole

Dimensions:

G/BSP

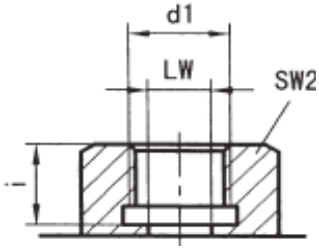

Type	PN (bar)	DN	LW	RA	d1	i	L	L1	B	L2	h1	h2	SW1	SW2	D	h3	L3	D1	C
VH3V-G1/4	500	06	06	/	G1/4	14	69	40	26	31,5	13,5	35	09	22	4,5	4,8	26	6	4
VH3V-G3/8	500	10	10	/	G3/8	14	72	42	32	31,5	16	40	09	27	5,3	5,8	31	8	4
VH3V-G1/2	500	13	12	/	G1/2	16	83	48	35	38,5	18	45	09	30	6,5	6	35	12	3
VH3V-G3/4	400	20	20	/	G3/4	18	93	60	50	48,5	23	58	12	41	6,5	6	44	15	5,5
VH3V-G1	350	25	25	/	G1	21	115	65	57	50,5	27,5	65	12	46	8,5	7	53,5	22	5

NPT

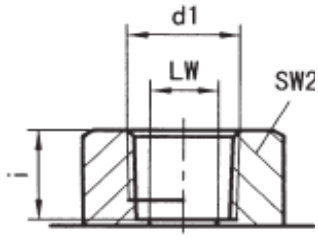

Type	PN (bar)	DN	LW	RA	D1 (D2)	i	L	L1	B	L2	h1	h2	SW1	SW2	D	h3	L3	D1	C
VH3V-NPT1/4	500	06	06	/	NPT1/4	14	69	40	26	31,5	13,5	35	09	22	4,5	4,8	26	6	4
VH3V-NPT3/8	500	10	10	/	NPT3/8	14	72	42	32	31,5	16	40	09	27	5,3	5,8	31	8	4
VH3V-NPT1/2	500	13	12	/	NPT1/2	16	83	48	35	38,5	18	45	09	30	6,5	6	35	12	3
VH3V-NPT3/4	400	20	20	/	NPT3/4	18	95	60	50	48,5	23	58	12	41	6,5	6	44	15	5,5
VH3V-NPT1	350	25	25	/	NPT1	21	113	65	57	50,5	27,5	65	12	46	8,5	7	53,5	22	5

LR – light

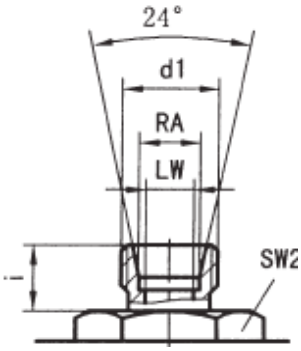

Type	PN (bar)	DN	LW	RA	d1	i	L	L1	B	L2	h1	h2	SW1	SW2	D	h3	L3	D1	C
VH3V-08LR	500	06	06	08	M14x1,5	10	67	40	26	31,5	13,5	35	09	22	4,5	4,8	26	6	4
VH3V-12LR	500	10	10	12	M18x1,5	11	74	42	32	31,5	16	40	09	27	5,3	5,8	31	8	4
VH3V-15LR	500	13	12	15	M22x1,5	12	82	48	35	38,5	18	45	09	30	6,5	6	35	12	3
VH3V-18LR	500	13	12	18	M26x1,5	12	82	48	35	38,5	18	45	09	30	6,5	6	35	12	3
VH3V-22LR	400	20	19	22	M30x2	14	101	60	50	48,5	23	58	12	41	6,5	6	44	15	5,5
VH3V-28LR	350	25	24	28	M36x2	14	108	65	57	50,5	27,5	65	12	46	8,5	7	53,5	22	5

SR – heavy

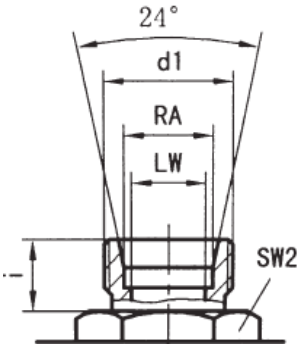

Type	PN (bar)	DN	LW	RA	d1	i	L	L1	B	L2	h1	h2	SW1	SW2	D	h3	L3	D1	C
VH3V-10SR	500	06	06	10	M18x1,5	12	73	40	26	31,5	13,5	35	09	22	4,5	4,8	26	6	4
VH3V-14SR	500	10	10	14	M22x1,5	14	80	42	32	31,5	16	40	09	27	5,3	5,8	31	8	4
VH3V-16SR	500	13	12	16	M24x1,5	14	86	48	35	38,5	18	45	09	30	6,5	6	35	12	3
VH3V-20SR	500	13	12	20	M30x2	16	90	48	35	38,5	18	45	09	30	6,5	6	35	12	3
VH3V-25SR	400	20	20	25	M36x2	18	109	60	50	48,5	23	58	12	41	6,5	6	44	15	5,5
VH3V-30R	350	25	25	30	M42x2	20	120	65	57	50,5	27,5	65	12	46	8,5	7	53,5	22	5

Thermis, spol. s r.o.
Mateří 14
614 00 Brno
Czech Republic

Tel: +420 545 226 177-184
Fax: +420 545 226 177, 181
E-mail: info@thermis.cz
www.thermis.cz

IČ: 26 88 36 43
DIČ: CZ 26 88 36 43
KOS v Brně, oddíl C, vložka 43349
Komerční banka Brno – Černá Pole

Bolev

KH*B
High pressure stainless steel ball valve

Specification:
Hydraulic two-way ball valves are used mainly for distribution of hydraulic liquids as a closing felement. The ball valve is made of stainless steel. Can be used with higher temperatures or in agressive mediums.

Technical parameters:
Nominal pressure: 31,5MPa
Valve body material: stainless steel AISI 304, 316
Operating temperature:- 30 + 170°C

Symbol:

Drawing:

KH*B-*-SR

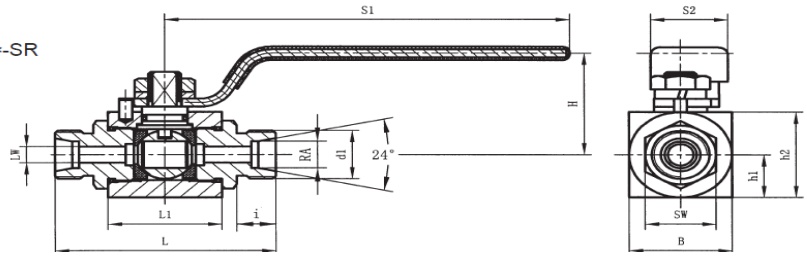

KH*B-*-NPT

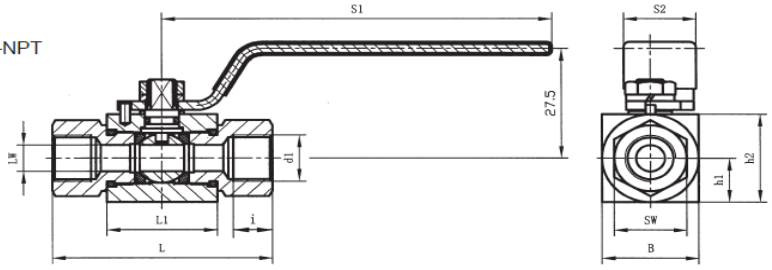

Dimensions:

Type	PN	DN	LW	RA	d1	i	L	L1	B	H	h1	h2	S1	S2	SW
KH1B-10-10SR	315	10	06	10	M18x1,5	12	68	35	32	38	16	32	125	24	22
KH1B-10-12SR	315	10	08	12	M20x1,5	12	69	35	32	38	16	32	125	24	27
KH1B-10-14SR	315	10	10	14	M22x1,5	14	73	35	32	38	16	32	125	24	27
KH2B-13-20SR	315	13	13	20	M30x2	16	110	45	40	50	20	40	160	30	30
KH2B-13NPT1/2	315	13	12	/	NPT 1/2	18	90	45	40	50	20	40	160	30	30
KH2B-13-NPT3/4	315	13	12	/	NPT 3/4	18	90	45	40	50	20	40	160	30	33
KH3B-20-NPT 1	315	20	20	/	NPT 3/4	20	98	51	50	55	25	50	160	30	46

Thermis, spol. s r.o.
Mateří 14
614 00 Brno
Czech Republic

Tel: +420 545 226 177-184
Fax: +420 545 226 177, 181
E-mail: info@thermis.cz
www.thermis.cz

IČ: 26 88 36 43
DIČ: CZ 26 88 36 43
KOS v Brně, oddíl C, vložka 43349
Komerční banka Brno – Černá Pole

Bolev

BKH
Ball valve with SAE joint

Specification:
Two-way ball valves with SAE J518C joint are mainly used for distribution of hydraulic liquids as a closing fitting. Ball valve material is steel, ball material is nickel-plated steel.

Model code:
BKH -- SAEFS -- * -- *
1 2 3 4

1. series code BKH – high pressure ball valve
2. joint: SAE J518C Standard
3. pressure grade: 210, 420 bar
4. nominal path: 13, 20, 25, 32, 40, 50 mm

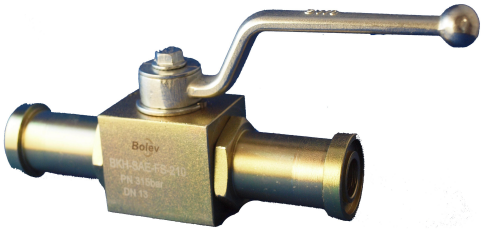

Symbol:

Drawing:

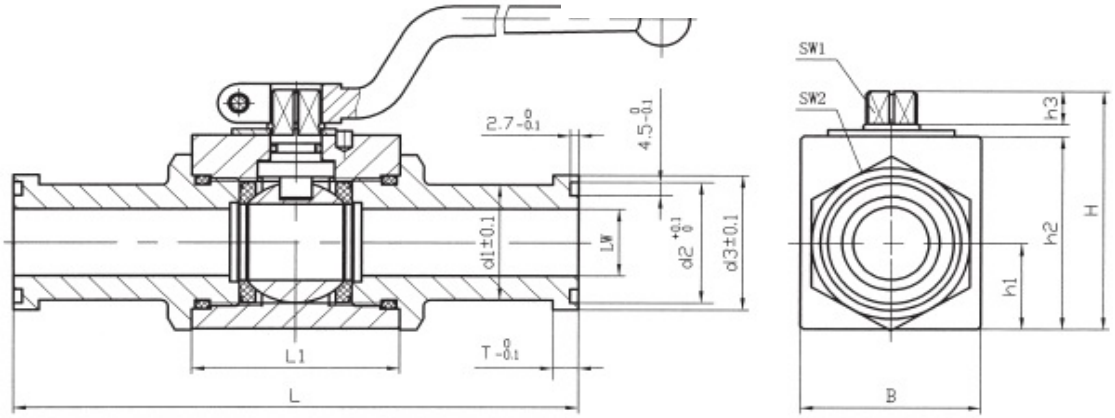

Dimensions:

Type	PN	DN	LW	L	L1	B	H	h1	h2	h3	SW1	SW2	T	d1	d2	d3	O-ring
BKH-SAE-FS-210-13	210	13	13	151	47	35	49	18	38	10	09	30	6,8	24	25,5	30,2	18,6x3,5
BKH-SAE-FS-420-13	420	13	13	151	47	35	49	18	38	10	09	30	7,9	24	25,5	31,8	18,6x3,5
BKH-SAE-FS-210-20	210	20	19	162	60	48	70	25	55	11	12	41	6,8	31,7	31,9	38,1	25,3,5
BKH-SAE-FS-420-20	315	20	19	174	60	48	70	25	55	11	12	41	8,9	32	31,9	41,3	25x3,5
BKH-SAE-FS-210-25	210	25	25	178	65	57	79	28,5	64	11	12	50	8,1	38	39,8	44,4	32,9x3,5
BKH-SAE-FS-420-25	315	25	22	198	65	57	79	28,5	64	11	12	50	9,6	38	39,8	47,6	32,9x3,5
BKH-SAE-FS-210-32	210	32	30	191	84	75	101	37,5	84	12	14	60	8,1	43	44,6	50,8	37,7x3,5
BKH-SAE-FS-420-32	350	32	27	223	84	75	101	37,5	84	12	14	60	10,4	44	44,6	54	37,7x3,5
BKH-SAE-FS-210-40	210	40	36	231	91	85	112	42,5	95	12	14	70	8,1	50	54,1	60,3	47,2x3,5
BKH-SAE-FS-420-40	350	40	32	281	91	85	112	42,5	95	12	14	70	12,7	51	54,1	63,5	47,2x3,5
BKH-SAE-FS-210-50	210	50	48	232	100	104	131	62	112,5	12	14	90	9,6	62	63,6	71,4	56,7x3,5
BKH-SAE-FS-420-50	350	50	45	316	100	104	131	62	112,5	12	14	90	12,7	67	63,6	79,4	56,7x3,5

Thermis, spol. s r.o.
Mateří 14
614 00 Brno
Czech Republic

Tel: +420 545 226 177-184
Fax: +420 545 226 177, 181
E-mail: info@thermis.cz
www.thermis.cz

IČ: 26 88 36 43
DIČ: CZ 26 88 36 43
KOS v Brně, oddíl C, vložka 43349
Komerční banka Brno – Černá Pole

Bolev

KHBF(KHMF)
Flange ball valve

Specification:
Flange ball valves are used mainly for distribution of hydraulic liquids as a closing fitting. The ball valve is made of steel, the ball is made of nickel-plated steel, flange connection.

Model code:

KHBF(KHMF) -- 016 -- PN040 -- 1 1 1 2 -- 02 X

1 2 3 4 5 6 7 8 9

1. series code KHBF(KHMF) – flange ball valve type
2. nominal path: 16, 20, 25, 32, 40, 50 mm
3. working medium: 40, 63, 100, 160, 250, 315 bar
4. valve body material: 1-steel
5. ball body material: 1-steel
6. operating temperature 1. -25~+100 °C, 2. -30~+170 °C
7. other airproof: 2-NBR
8. handle type: 02-aluminium crooked handle, 06-steel crooked handle, 09-without handle
9. construction design: to be decided by the manufacturer

Symbol:

Drawing:

KHBF

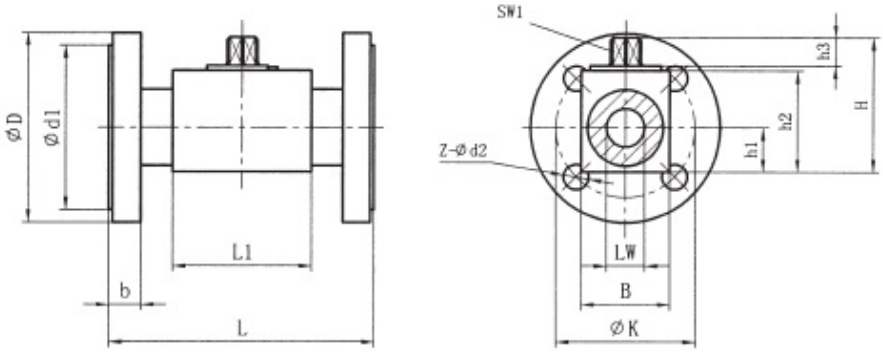

KHMF

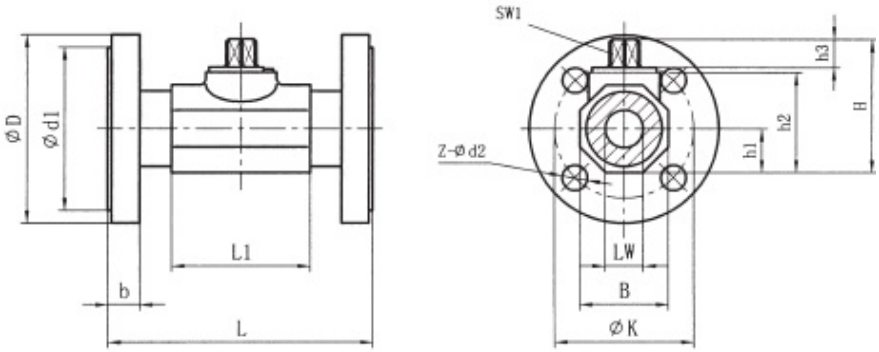

Thermis, spol. s r.o.
Mateří 14
614 00 Brno
Czech Republic

Tel: +420 545 226 177-184
Fax: +420 545 226 177, 181
E-mail: info@thermis.cz
www.thermis.cz

IČ: 26 88 36 43
DIČ: CZ 26 88 36 43
KOS v Brně, oddíl C, vložka 43349
Komerční banka Brno – Černá Pole

Dimensions:

Type	Range	DN	LW	L	L1	D	d1	d2	K	B	b	H	h1	h2	h3	SW1	Z
KHBF-016	10-40	16	15	130	48	95	45	14	65	38	16	62	19	45	11	9	4
KHBF-016	63-160					105		14	75		20						
KHBF-016	250-315					130		18	90		26						
KHBF-020	10-40	20	20	150	60	105	58	14	75	48	18	75	25	57	11	12	4
KHBF-025	10-40	25	25	160	65	115	68	14	85	57	18	82	28,5	64	11	12	4
KHBF-025	63-160					140		18	100		24						
KHBF-025	250					150		22	105		28						
KHBF-025	315					160		22	115		34						

Type	Range	DN	LW	L	L1	D	d1	d2	K	B	b	H	h1	h2	h3	SW1	Z
KHMF-032	10-40	32	30	180	84	140	78	18	100	75	18	103	37,5	84	12	14	4
KHMF-032	63-160					155		22	110		26						
KHMF-040	10-40	40	38	200	91	150	88	18	110	85	18	114	42,5	95	12	14	4
KHMF-040	63-160					170		22	125		28						
KHMF-040	250					185		26	135		34						
KHMF-040	315					195		26	145		38						
KHMF-050	10-40	50	48	230	100	165	102	18	125	105	20	131,5	52,5	112,5	12	14	4
KHMF-050	63					180		22	135		26						
KHMF-050	100-160					195		26	145		30						
KHMF-050	250					200		26	150		38						8
KHMF-050	315					210		26	160		42						

Type	range	DN	LW	L	L1	D	d1	d2	K	B	b	H	h1	h2	h3	SW1	Z
KHMF-032	10-40	32	30	130	84	140	78	18	100	75	18	103	37,5	84	12	17	4
KHMF-040		40	38	140	91	150	88		110	85	18	114	42,5	95			
KHMF-050		50	48	150	100	165	102		125	105	20	131,5	52,5	112,5			

Thermis, spol. s r.o.
Mateří 14
614 00 Brno
Czech Republic

Tel: +420 545 226 177-184
Fax: +420 545 226 177, 181
E-mail: info@thermis.cz
www.thermis.cz

IČ: 26 88 36 43
DIČ: CZ 26 88 36 43
KOS v Brně, oddíl C, vložka 43349
Komerční banka Brno – Černá Pole

Bolev

KHP(PKH)
Two-way ball valve for manifold mounting

Specification:
Two-way ball valve for manifold mounting. Ball valve material is steel, ball material is nickel-plated steel.

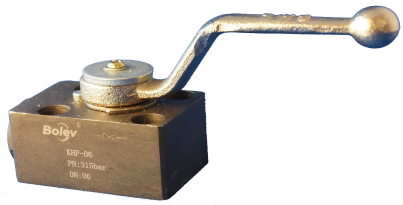

Model code:

KHP(PKH) -- 10 -- 1 1 1 2 -- 01 X
1 2 3 4 5 6 7 8

1. series code KHP(PKH) – two-way ball valve for manifold mounting
2. nominal path: 6, 10, 16, 20, 25, 32, 40, 50 mm
3. valve body material: 1-steel
4. ball body material: 1-steel, 2-brass
5. operating temperature 1. -25~+100 °C, 2. -30~+170 °C
6. otehr airproof: 2-NBR, 4-FPM
7. handle type: 02-aluminium crooked handle, 04-zinc casting crooked handle, 06-steel crooked handle, 09-without handle
8. Design number: to be decided by the manufacturer

Symbol:

Drawing:

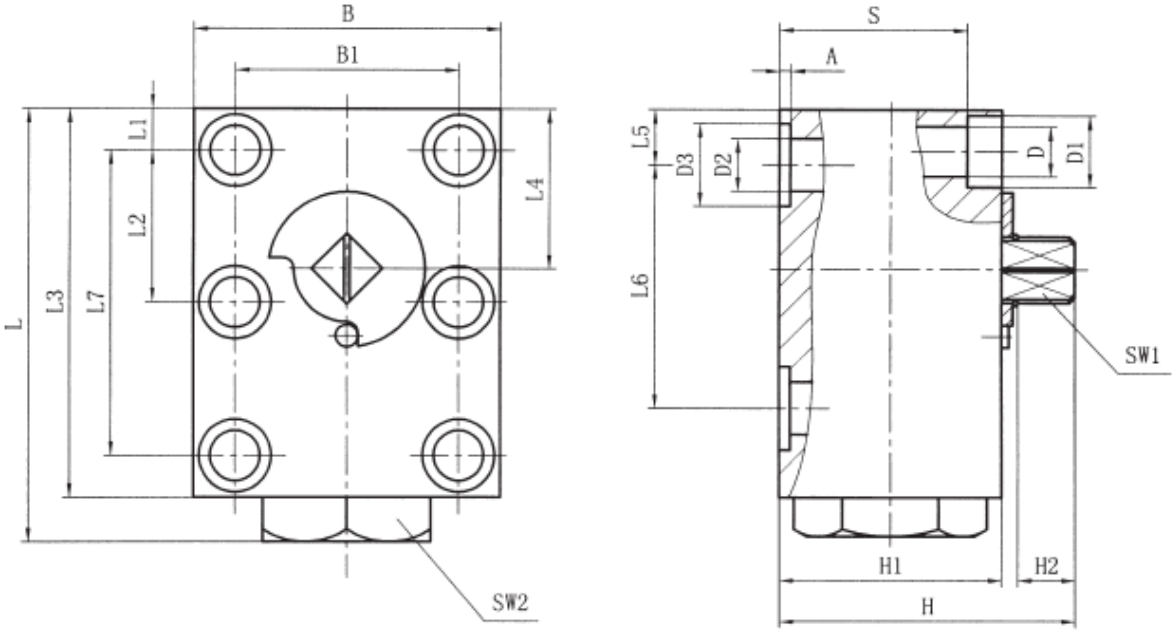

Thermis, spol. s r.o.
Mateří 14
614 00 Brno
Czech Republic

Tel: +420 545 226 177-184
Fax: +420 545 226 177, 181
E-mail: info@thermis.cz
www.thermis.cz

IČ: 26 88 36 43
DIČ: CZ 26 88 36 43
KOS v Brně, oddíl C, vložka 43349
Komerční banka Brno – Černá Pole

Dimensions:

Type	PN	DN	LW	L	L1	L2	L3	L4	L5	L6	L7	B	B1
KHP-06	315	06	06	64	8,5	17,5	59	25	8,5	35	35	40	27
KHP-10	315	10	9,5	77	7,5	27,5	70	29	10	44	55	55	40
KHP-16	315	16	16	110	8,5	41,5	100	43	17	58	83	60	45
KHP-20	315	20	20	126	10	48,5	117	54	20	69	97	70	51
KHP-25	315	25	23,5	145	10	57,5	135	64,5	24	81	115	80	60
KHP-32	315	32	30	177	12	68	165	75,5	29	96	136	100	78
KHP-40	315	40	38	200	30	56	185	80	30	112	112	130	95
KHP-50	315	50	48	245	38	68	220	106	38	136	136	149	112

Type	SW1	SW2	H	H1	H2	D	D1	D2	D3	A	S	O-ring
KHP-06	09	22	37,5	30	7	6,6	11	6	11,7	1,6	23	8x2
KHP-10	09	30	58	40	8,5	9	13	9,5	15	2	31	10x2,6
KHP-16	09	41	72,5	52	11	9	13	16	25	2	43	20,29x2,62
KHP-20	12	41	88,5	60	11	10,5	16,5	20	30	2,5	50	23,39x3,53
KHP-25	12	46	97,5	65	11	10,5	17	23,5	35	2,5	55	28,17x3,53
KHP-32	14	55	118,5	80	12	13	19	30	40	2,5	67	32,92x3,53
KHP-40	14	65	118,5	93	12	17	25	38	48	3	77	42x3,5
KHP-50	14	/	129	110	12	22	33	48	55,4	2,9	88,5	49x3,5

Type	Inner hexagon screw thread	Torque Nm (rub coefficient μ=0,14)
KHP-06	M6-10,9	13
KHP-10	M8-10,9	30
KHP-16	M8-12,9	35
KHP-20	M10-12,9	60
KHP-25	M10-12,9	60
KHP-32	M12-12,9	110
KHP-40	M16-12,9	300
KHP-50	M20-12,9	600

Thermis, spol. s r.o.
Mateří 14
614 00 Brno
Czech Republic

Tel: +420 545 226 177-184
Fax: +420 545 226 177, 181
E-mail: info@thermis.cz
www.thermis.cz

IČ: 26 88 36 43
DIČ: CZ 26 88 36 43
KOS v Brně, oddíl C, vložka 43349
Komerční banka Brno – Černá Pole

Bolev

BEH-SAE, KHSAE210
Flange ball valve – SAE

Specification:
Flange ball valve with SAE joint are used for distribution of hydraulic liquids as a closing fitting. Ball valve material is steel, ball material is nickel-plated steel. Mounting is done onto SAE flange or by screws.

Model code:

BEH -- ** -- SAE
1 2 3

1. series code: BEH – highpressure ball valve
2. nominal pathální velikost: 32/40/50 mm
3. joint: SAE flange

Symbol:

Drawing:

BEH-SAE

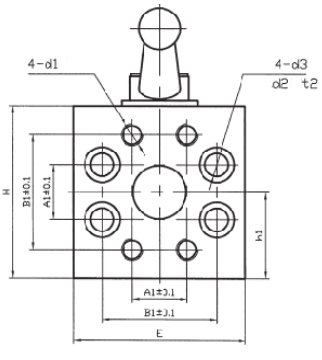

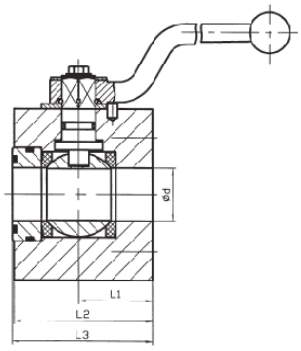

KHSAE210

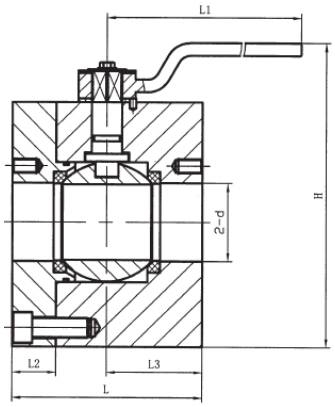

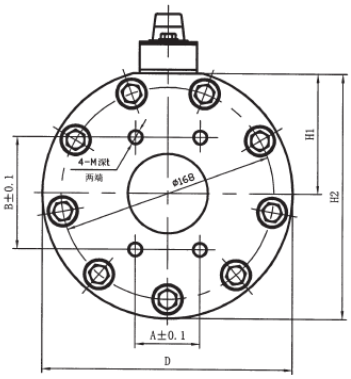

Dimensions:

Type	PN	d	A1	B1	H	h1	E	L1	L2	L3	d1	t1	d2	t2	d3
BEH-32-SAE	400	31	31,8	66,6	100	50	100	43,5	82	83	1/2••-13 UNC-2A	25	20,3	14	13,5
BEH-40-SAE	400	38	36,5	79,3	120	60	120	53,5	99	100	5/8••-11 UNC-2B	36	25,5	17	16,7
BEH-50-SAE	400	48	44,5	96,8	124	62	134	61	110	111	3/4••-10 UNC-2B	36	30,1	21	19,8

Type	PN	d	L1	L2	L3	L	H	H1	H2	A	B	D	M	t
KHSAE210-65	210	62	315	35	75	150	241	95	194	50,8	88,9	198	12	19
KHSAE210-80	210	74	315	40	80	160	252	100	205	61,9	106,4	210	16	2

Thermis, spol. s r.o.
Mateří 14
614 00 Brno
Czech Republic

Tel: +420 545 226 177-184
Fax: +420 545 226 177, 181
E-mail: info@thermis.cz
www.thermis.cz

IČ: 26 88 36 43
DIČ: CZ 26 88 36 43
KOS v Brně, oddíl C, vložka 43349
Komerční banka Brno – Černá Pole

Bolev

BME
Stainless steel ball valve

Specification:
Hydraulic stainless steel two-way valves are mainly used for distribution of natural gas, water, steam or corrosive mediums as a closing element. Ball valve material is stainless steel.

Technical parameters:
Nominal pressure: 31,5MPa
Applicable mediums: natural gas, water, steam
Material: stainless steel
Operating temperature: - 30 ~ + 170°C

Symbol:

Drawing:

BML-LR-08

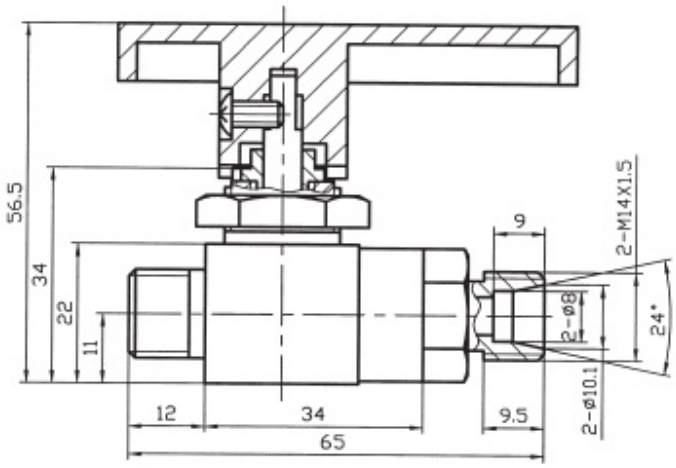

BME-LR-12

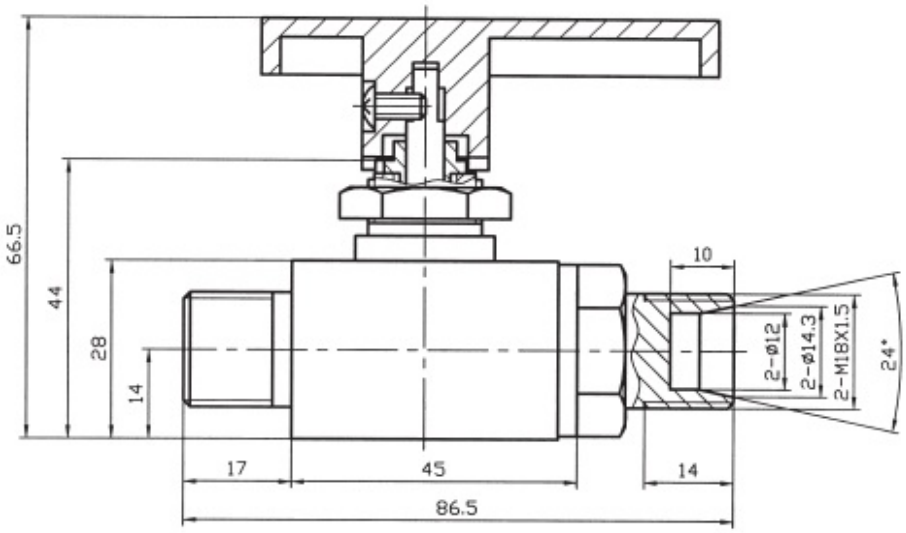

Thermis, spol. s r.o.
Mateří 14
614 00 Brno
Czech Republic

Tel: +420 545 226 177-184
Fax: +420 545 226 177, 181
E-mail: info@thermis.cz
www.thermis.cz

IČ: 26 88 36 43
DIČ: CZ 26 88 36 43
KOS v Brně, oddíl C, vložka 43349
Komerční banka Brno – Černá Pole

Bolev

DKHB
Mining ball valve

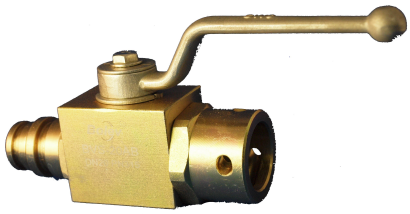

Specification:
Mining ball valves are mainly used for hydraulic liquid distribution as a closing element. Ball valve material is steel, ball material is nickel-plated steelm mining connection.

Model code: ** -- **
1 2

1. Left connection specification - A, B
2. Right connection specification -A, B

Symbol:

Drawing:

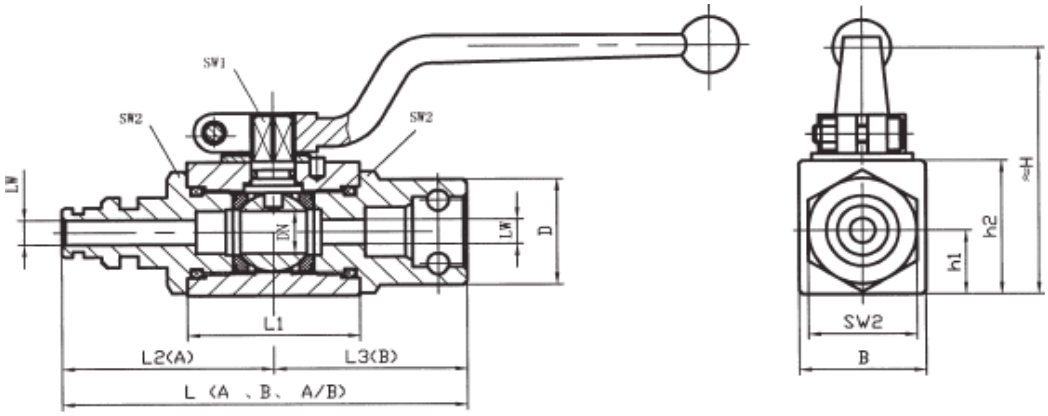

Dimensions:

Type	PN	DN	LW	L	L1	L2	L3	B	H	h1	h2	SW1	SW2	D
6A	500	06	04	109	40	54,5	–	26	45	13,5	33	09	24	24
10A	500	13	07	116	47	58	–	35	49	18	38	09	30	30
12A	500	16	10	116	48	58	–	38	61	19	45	09	35	35
20A	315	20	16	131	60	65,5	–	48	70	25	55	12	41	41
25A	315	25	20	151	65	75,5	–	57	79	28,5	64	12	53	53
32A	315	32	25	178	84	89	–	75	101	37,5	84	14	60	60
6A-6B	500	06	04	104	40	54,5	49,5	26	45	13,5	33	09	24	24
10A-10B	500	13	07	111	47	58	53	35	49	18	38	09	30	30
12A-12B	500	16	10	112	48	58	54	38	61	19	45	09	35	35
20A-20B	315	20	16	125	60	65,5	59,5	48	70	25	55	12	41	41
25A-25B	315	25	20	144	65	75,5	68,5	57	79	28,5	64	12	53	53
32A-32B	315	32	25	167	84	89	78	75	101	37,5	84	14	60	60
6B	500	06	04	99	40	–	49,5	26	45	13,5	33	09	24	24
10B	500	13	07	106	47	–	53	35	49	18	38	09	30	30
12B	500	16	10	108	48	–	54	38	61	19	45	09	35	35
20B	315	20	16	119	60	–	59,5	48	70	25	55	12	41	41
25B	315	25	20	137	65	–	68,5	57	79	28,5	64	12	53	53
32B	315	32	25	156	84	–	78	75	101	37,5	84	14	60	60

Thermis, spol. s r.o.
Mateří 14
614 00 Brno
Czech Republic

Tel: +420 545 226 177-184
Fax: +420 545 226 177, 181
E-mail: info@thermis.cz
www.thermis.cz

IČ: 26 88 36 43
DIČ: CZ 26 88 36 43
KOS v Brně, oddíl C, vložka 43349
Komerční banka Brno – Černá Pole

Bolev

DASH
Ball valve with DASH joint

Specification:
Mining ball valves are mainly used for distribution of hydraulic liquids as a closing element. Ball valve material is steel, ball material is nickel-plated steel, DASH joint.

Technical parameters: DASH -- ** -- *
(1 — 2 — 3)

1. series code DASH – high pressure ball valve
2. nominal path: 06, 08, 12, 16, 20 mm
3. joint type: A, B, AB

Symbol:

Drawing:

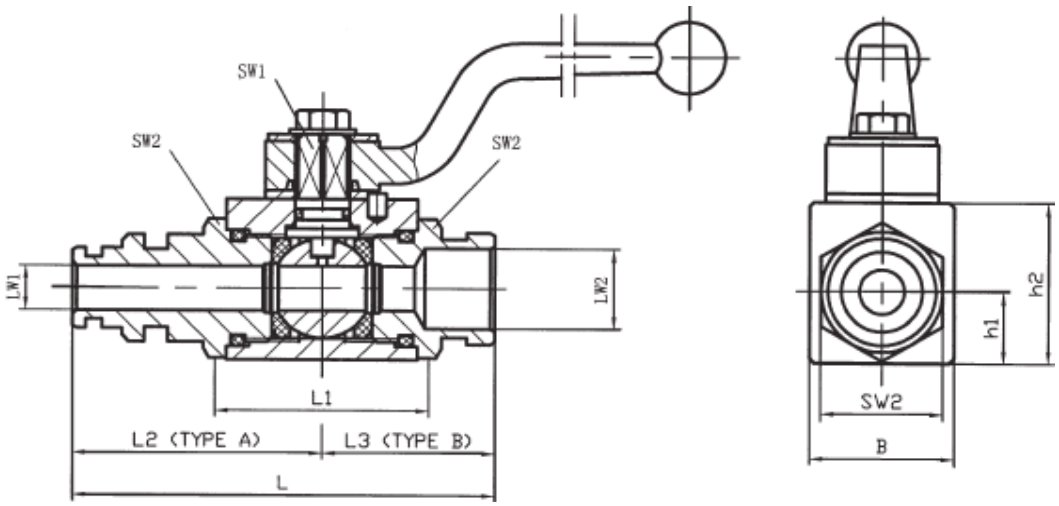

Dimensions:

Type	PN	DN	LW1	LW2	L	L1	L2	L3	B	h1	h2	SW1	SW2
DASH-06A	500	DN10	07	–	2XL2	42	55	–	32	16	36	09	27
DASH-08A	500	DN12	10	–	2XL2	42	55	–	32	16	36	09	27
DASH-12A	500	DN20	16	–	2XL2	48	58	–	38	19	45	09	35
DASH-16A	315	DN25	22	–	2XL2	65	75,5	–	57	28,5	64	12	50
DASH-20A	315	DN32	27	–	2XL2	65	75,5	–	57	28,5	64	12	50
DASH-06B	500	DN10	–	14	2XL3	42	–	37,5	32	16	36	09	27
DASH-08B	500	DN12	–	18	2XL3	42	–	38	32	16	36	09	27
DASH-12B	500	DN20	–	24	2XL3	48	–	41,5	38	19	45	09	35
DASH-16B	315	DN25	–	31	2XL3	65	–	56	57	28,5	64	12	50
DASH-20B	315	DN32	–	38	2XL3	65	–	53	57	28,5	64	12	50
DASH-06AB	500	DN10	07	14	L2+L3	42	55	37,5	32	16	36	09	27
DASH-08AB	500	DN12	10	18	L2+L3	42	55	38	32	16	36	09	27
DASH-12AB	500	DN20	16	24	L2+L3	48	58	41,5	38	19	45	09	35
DASH-16AB	315	DN25	22	31	L2+L3	65	75,5	56	57	28,5	64	12	50
DASH-20AB	315	DN32	27	38	L2+L3	65	75,5	53	57	28,5	64	12	50

Thermis, spol. s r.o.
Mateří 14
614 00 Brno
Czech Republic

Tel: +420 545 226 177-184
Fax: +420 545 226 177, 181
E-mail: info@thermis.cz
www.thermis.cz

IČ: 26 88 36 43
DIČ: CZ 26 88 36 43
KOS v Brně, oddíl C, vložka 43349
Komerční banka Brno – Černá Pole

Bolev

KP-XC13
Spring ball valve

Specification:
Spring ball valves are mainly used for hydraulic liquid distribution as a closing element. Opened as long as the handle is held, after releasing the handle the system will be automatically closed.

Symbol:

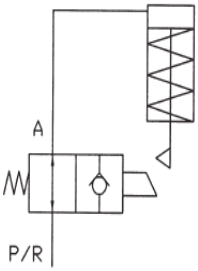

Drawing:

KP-XC13-12LR-A
KP-XC13-15LR-A

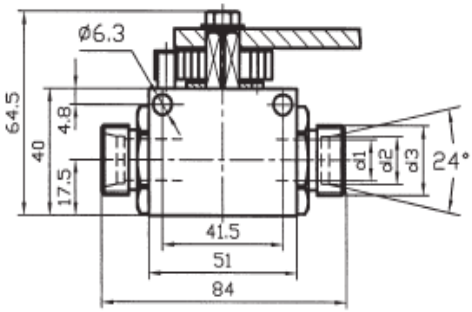

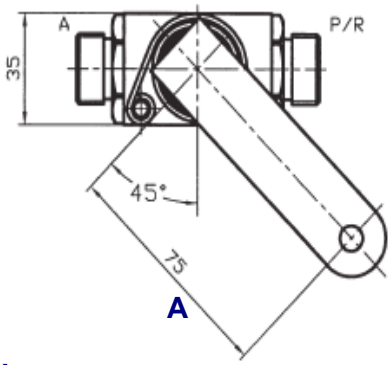

A

KP-XC13-12LR-B
KP-XC13-15LR-B

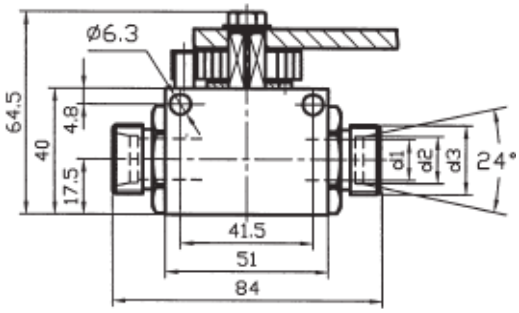

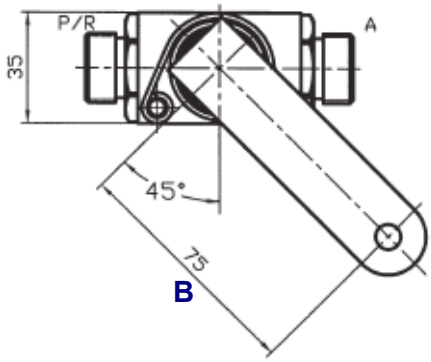

B

Dimensions:

Type	PN	d1	D2	d3
KP-XC13-12LR-*	400	10	12	M18x1,5
KP-XC13-15LR-*	400	13	15	M22x1,5

Thermis, spol. s r.o.
Mateří 14
614 00 Brno
Czech Republic

Tel: +420 545 226 177-184
Fax: +420 545 226 177, 181
E-mail: info@thermis.cz
www.thermis.cz

IČ: 26 88 36 43
DIČ: CZ 26 88 36 43
KOS v Brně, oddíl C, vložka 43349
Komerční banka Brno – Černá Pole

Bolev

LLP07
Ball valve with filter

Specification:
Hydraulic two-way ball valves are mainly used for hydraulic liquid distribution as a closing element. Ball valve material is steel, ball material is nickel-plated steel. Built-in filter is part of the valve.

Symbol:

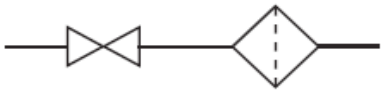

Drawing:

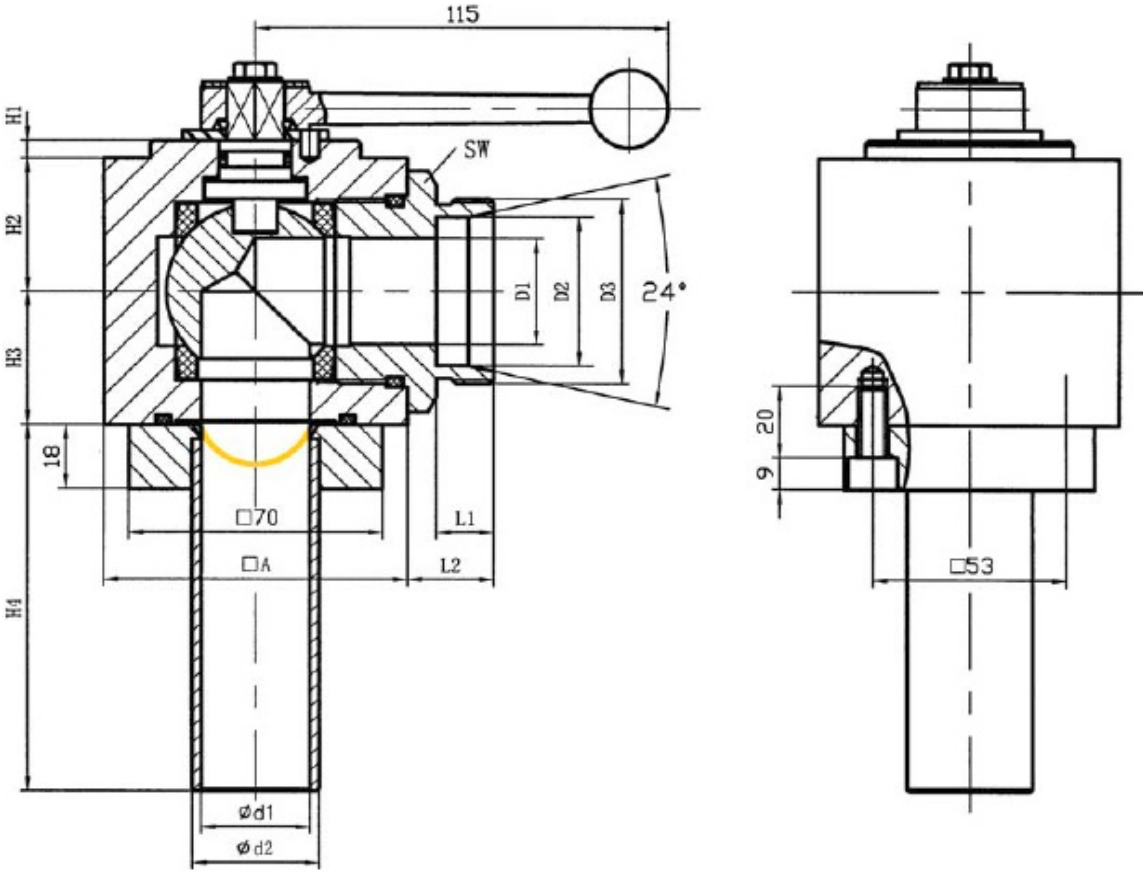

Dimensions:

Type	PN	H1	H2	H3	H4	A	L1	L2	d1	d2	D1	D2	D3	SW
LLP07-DN25-35LR-35	400	6	27	27	103	70	16	25	30	35	23	35	M45x2	50
LLP07-DN32-42LR-35	400	5	37,5	37,5	103	84	16	24	30	35	30	42	M52x2	60
LLP07-DN32-42LR-42	400	5	37,5	37,5	103	84	16	24	36	42	30	42	M52x2	60

Thermis, spol. s r.o.
Mateří 14
614 00 Brno
Czech Republic

Tel: +420 545 226 177-184
Fax: +420 545 226 177, 181
E-mail: info@thermis.cz
www.thermis.cz

IČ: 26 88 36 43
DIČ: CZ 26 88 36 43
KOS v Brně, oddíl C, vložka 43349
Komerční banka Brno – Černá Pole

Bolev

KHB
Ball valve with pneumatic accutors

Specification:
Hydraulic two-way ball valves are mainly used for hydraulic liquid distribution as a closing element. Ball valve material is steel, ball material is nickel-plated steel. Handle is operated by a pneumatic drive.

Technical parameters:
Control medium: compressed air
Control pressure: 0,6~0,8 MPa
Ball valve dimensions: identical with KHB models

Drawing:

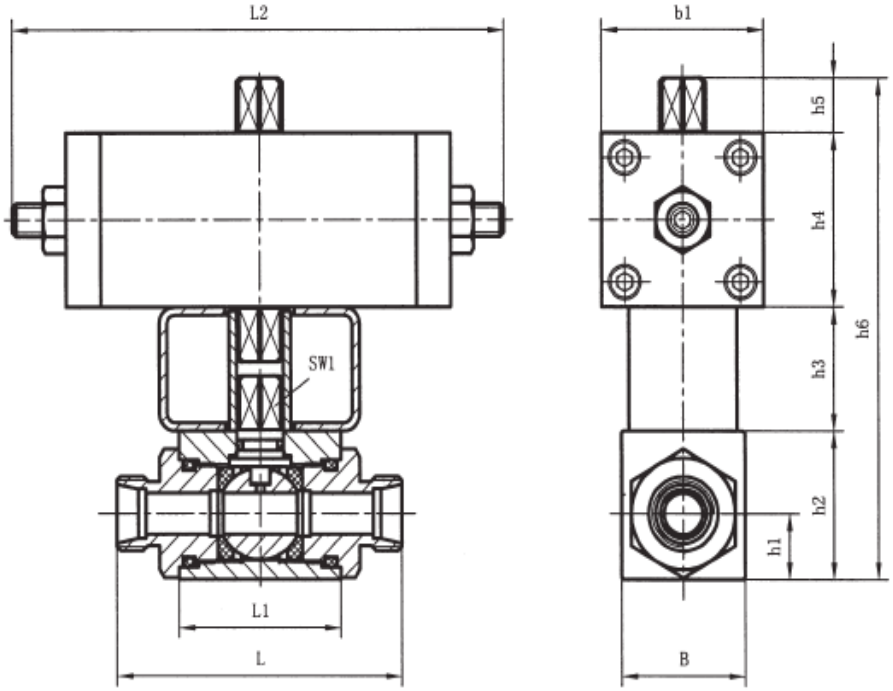

Dimensions:

Type	DN	PN	L	L1	L2	B	b1	h1	h2	h3	h4	h5	h6	SW1
Q04-KHB-*	04	500	Dimensions identical with ball valves KHB	40	174	26	60	13,5	33	40	60	20	153	09
Q06-KHB-*	06	500		40	174	26	60	13,5	33	40	60	20	153	09
Q08-KHB-*	08	500		42	198	32	70	16	36	60	70	20	186	09
Q10-KHB-*	10	500		42	198	32	70	16	36	60	70	20	186	09
Q13-KHB-*	13	500		47	198	35	70	18	38	60	70	20	188	09
Q16-KHB-*	16	400		48	237	38	84	19	45	60	84	20	209	09
Q20-KHB-*	20	315		60	237	48	84	25	55	60	84	20	219	12
Q25-KHB-*	25	315		65	237	57	84	28,5	64	60	84	20	228	12
Q32-KHB-*	32	315		84	290	75	108	37,5	84	60	108	30	282	14
Q40-KHB-*	40	315		91	290	85	108	42,5	95	60	108	30	293	14
Q50-KHB-*	50	315		100	290	104	108	52	112,5	60	108	30	310,5	14

Thermis, spol. s r.o.
Mateří 14
614 00 Brno
Czech Republic

Tel: +420 545 226 177-184
Fax: +420 545 226 177, 181
E-mail: info@thermis.cz
www.thermis.cz

IČ: 26 88 36 43
DIČ: CZ 26 88 36 43
KOS v Brně, oddíl C, vložka 43349
Komerční banka Brno – Černá Pole

Bolev

CJZQ
High pressure ball valve

Specification:
High pressure ball valves are mainly used for hydraulic liquid distribution as a closing element. Ball valve material is steel, ball material is nickel-plated steel.

Technical parameters:
Nominal pressure: 31,5 MPa
Applicable medium: hydraulic oil

Symbol:

Drawing:

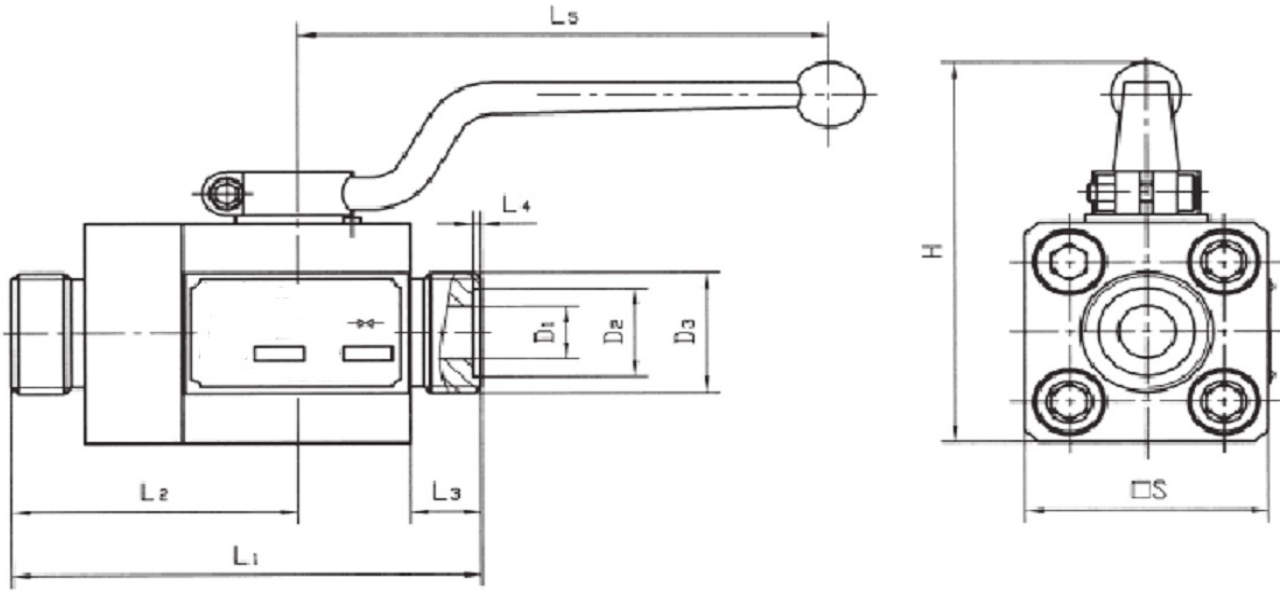

Dimensions:

Type	D1	D2	D3	L1	L2	L3	L4	L5	H	□S
CJZQ-H10L	Φ 9	Φ 20	M27x1,5	100	62	14	2	105	86	□ 46
CJZQ-H15L	Φ 14	Φ 22	M30x1,5	105	64	16	2	147	99	□ 52
CJZQ-H20L	Φ 18	Φ 28	M36x2	121	74	18	2,5	185	108	□ 60
CJZQ-H25L	Φ 23	Φ 35	M42x2	135	80	20	2,5	185	118,5	□ 70
CJZQ-H32L	Φ 30	Φ 40	M52x2	160	96	22	2,5	240	137	□ 84
CJZQ-H40L	Φ 38	Φ 45	M60x2	180	106	24	2,5	240	148	□ 96
CJZQ-H50L	Φ 48	Φ 55	M72x2	205	105	26	2,5	240	172	□ 120

Thermis, spol. s r.o.
Mateří 14
614 00 Brno
Czech Republic

Tel: +420 545 226 177-184
Fax: +420 545 226 177, 181
E-mail: info@thermis.cz
www.thermis.cz

IČ: 26 88 36 43
DIČ: CZ 26 88 36 43
KOS v Brně, oddíl C, vložka 43349
Komerční banka Brno – Černá Pole

Bolev

YJZQ
High pressure ball valve

Specification:
High pressure ball valves are mainly used for hydraulic liquid distribution as a closing element. Ball valve material is steel, ball material is nickel-plated steel.

Technical parameters:
Nominal pressure: 31,5 MPa
Applicable medium: hydraulic oil

Symbol:

Drawing:

Inner screw thread joint

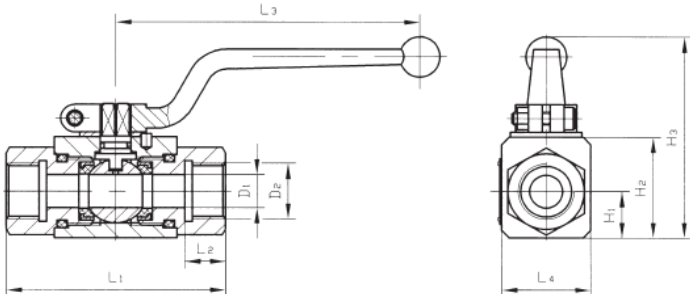

Outer screw thread joint

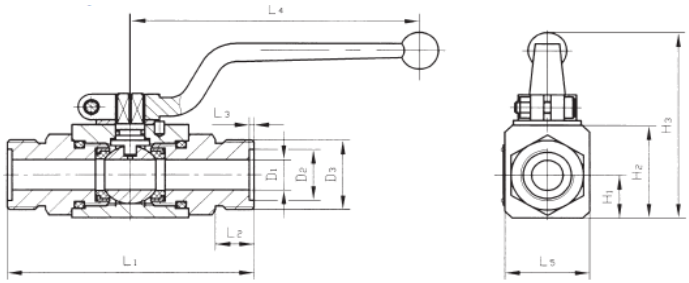

Dimensions:

Type	D1	D2	L1	L2	L3	L4	H1	H2	H3
YJZQ-J10N	Φ 10	M18x1,5	78	14	105	32	16	36	76
YJZQ-J15N	Φ 15	M22x1,5	86	16	147	38	19	45	80
YJZQ-J20N	Φ 20	M27x2	108	18	185	48	25	55	101
YJZQ-J25N	Φ 25	M33x2	116	20	185	57	28,5	64	111
YJZQ-J32N	Φ 32	M42x2	136	22	240	75	37,5	84	134
YJZQ-J40N	Φ 40	M48x2	148	24	240	85	42,5	95	165
YJZQ-J50N	Φ 50	M64x2	180	26	240	104	52	112,5	1

Type	D1	D2	D3	L1	L2	L3	L4	L5	H1	H2	H3
YJZQ-J10W	Φ 10	Φ 20	M27x1,5	94	16	2	105	32	16	36	76
YJZQ-J15W	Φ 15	Φ 22	M30x1,5	102	16	2	147	38	19	45	80
YJZQ-J20W	Φ 20	Φ 28	M36x2	124	18	2,5	185	48	25	55	101
YJZQ-J25W	Φ 25	Φ 35	M42x2	136	20	2,5	185	57	28,5	64	111
YJZQ-J32W	Φ 32	Φ 40	M52x2	149	20	2,5	240	75	37,5	84	134
YJZQ-J40W	Φ 40	Φ 50	M64x2	180	24	2,5	240	85	42,5	95	165
YJZQ-J50W	Φ 50	Φ 60	M72x2	210	26	2,5	240	104	52	112,5	180

Thermis, spol. s r.o.
Mateří 14
614 00 Brno
Czech Republic

Tel: +420 545 226 177-184
Fax: +420 545 226 177, 181
E-mail: info@thermis.cz
www.thermis.cz

IČ: 26 88 36 43
DIČ: CZ 26 88 36 43
KOS v Brně, oddíl C, vložka 43349
Komerční banka Brno – Černá Pole

Bolev

YQ
High pressure closing valve

Specification:
High pressure ball valves are mainly used for hydraulic liquid distribution as a closing element. Ball valve material is steel, ball material is nickel-plated steel.

Technical parameters:
Nominal pressure: 31,5 MPa
Applicable medium: hydraulic oil

Symbol:

A joint accumulator

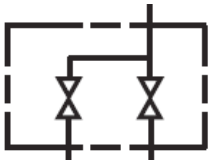

B oil feed **C system joint**

Drawing:

YQ_1- 25H - NPT1

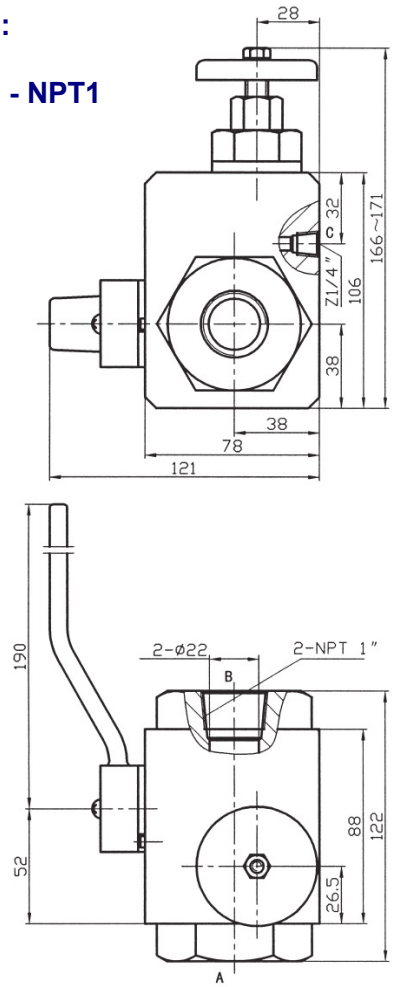

YQ_2- 32H - NPT1 ½

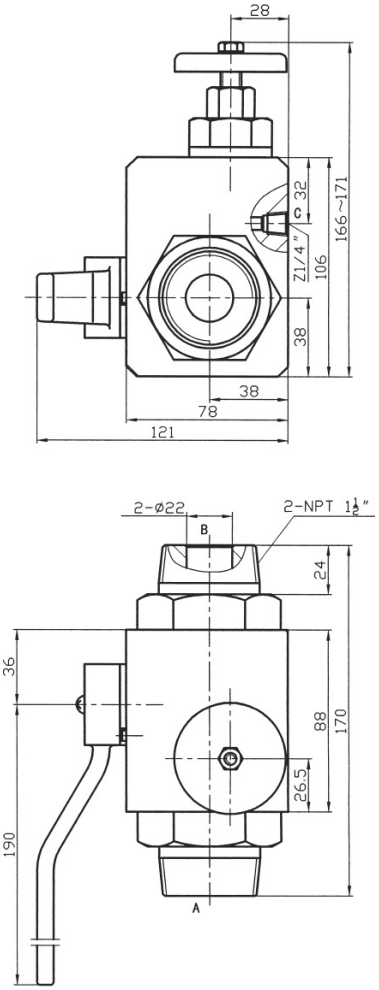

Thermis, spol. s r.o.
Mateří 14
614 00 Brno
Czech Republic

Tel: +420 545 226 177-184
Fax: +420 545 226 177, 181
E-mail: info@thermis.cz
www.thermis.cz

IČ: 26 88 36 43
DIČ: CZ 26 88 36 43
KOS v Brně, oddíl C, vložka 43349
Komerční banka Brno – Černá Pole

Bolev

QJH
High pressure globe stop valve

Specification:
High pressure globe valves are mainly used for hydraulic liquid distribution as a closing element. Ball valve material is steel, ball material is nickel-plated steel.

Model code:

QJ H -- * *
1 2 3 4

1. series code: QJ – globe stop valve
2. pressure Grade: H-32 MPa
3. nominal path: 6, 10, 15, 20, 25, 32, 40, 50, 65, 80 mm
4. connection type: B- manifold mounting, F- flange type, NL-female thread connection, WL- male thread connection

Symbol:

Drawing:

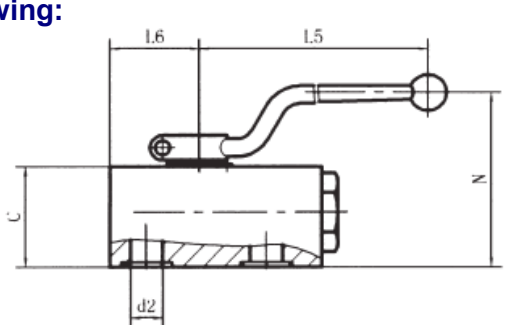

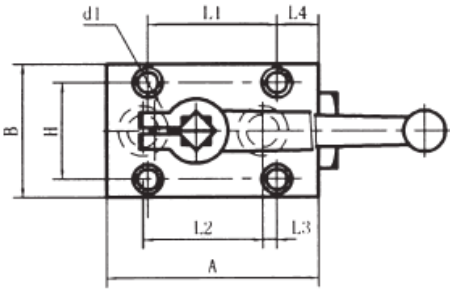

Dimensions:

Manifold mounting

Type	A	B	C	L1	L2	L3	L4	L5	L6	H	N	d1	d2
QJH-10B	80	54	42	60	45	11	13	105	33	38	62	Φ 8,5	Φ 9
QJH-15B	92	58	44	56	52	6	18	147	39	42	77	Φ 8,5	Φ 14
QJH-20B	108	70	52	70	60	8,5	21,5	185	45	50	90	Φ 11	Φ 18
QJH-25B	125	75	60	80	72	11	20	185	54,5	55	99	Φ 11	Φ 24
QJH-32B	152	98	71	120	90	19	16	240	69,5	75	111	Φ 13	Φ 30
QJH-40B	185	120	93	150	110	23	20	240	80	90	129	Φ 17	Φ 38

Flange type:

Type	D	L	L1	L2	H	F	E	N
QJH-50F	Φ 62	170	30	17	104	118	55	240
QJH-65F	Φ 77	220	45	22	126	132	67	—
QJH-80F	Φ 91	240	45	25	139	142	75	—

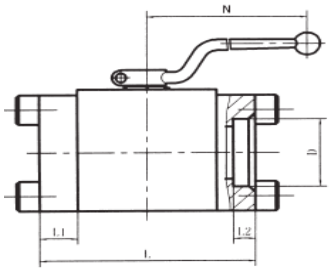

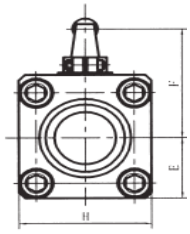

Thermis, spol. s r.o.
Mateří 14
614 00 Brno
Czech Republic

Tel: +420 545 226 177-184
Fax: +420 545 226 177, 181
E-mail: info@thermis.cz
www.thermis.cz

IČ: 26 88 36 43
DIČ: CZ 26 88 36 43
KOS v Brně, oddíl C, vložka 43349
Komerční banka Brno – Černá Pole

Dimensions:

Female thread connection:

Type	A	B	C	L	L1	H	2-D
QJH-06NL	13,5	27	105	67	26	33	M16x1,5
QJH-10NL	16	40	105	76	32	36	M18x1,5
QJH-15NL	19	45	147	88	38	45	M27x2
QJH-20NL	25	46	185	100	48	55	M33x2
QJH-25NL	28,5	59	185	116	57	64	M42x2
QJH-32NL	37,5	74	240	130	75	84	M48x2
QJH-40NL	42,5	88	240	140	85	95	M60x2

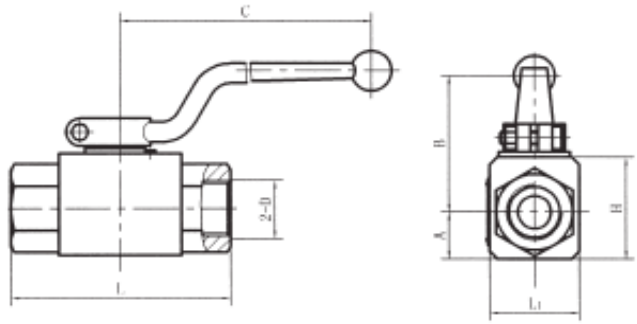

Male thread connection:

Type	A	B	C	L	L1	H	2-D
QJH-06WL	13,5	27	105	71	26	33	M16x1,5
QJH-10WL	16	40	105	86	32	36	M22x1,5
QJH-15WL	19	45	147	96	38	45	M30x1,5
QJH-20WL	25	46	185	112	48	55	M36x2
QJH-25WL	28,5	59	185	122	57	64	M42x2
QJH-32WL	37,5	74	240	145	75	84	M52x2
QJH-40WL	42,5	88	240	163	85	95	M60x2

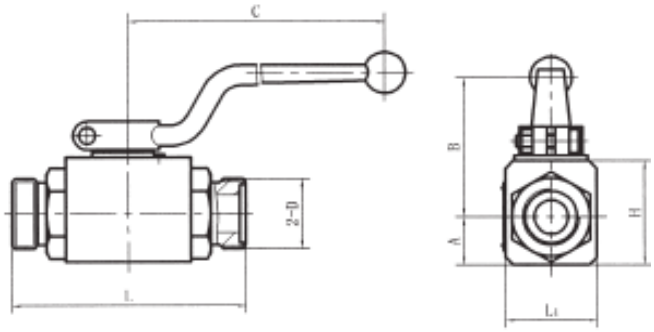

Flange type:

Type	L	L1	H	H1	D	d1	d2	M
QJH-10F	103	105	44	36	Φ 68	Φ 22	Φ 10	M10
QJH-15F	113	147	46	40	Φ 75	Φ 24	Φ 15	M10
QJH-20F	117	185	48	42	Φ 78	Φ 30	Φ 20	M10
QJH-25F	133	185	56	56	Φ 100	Φ 35	Φ 23	M12
QJH-32F	145	240	63	62	Φ 110	Φ 45	Φ 32	M12
QJH-40F	175	240	74	73	Φ 130	Φ 50	Φ 38	M16

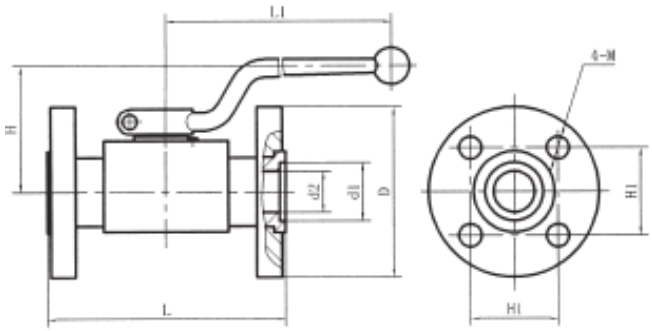

Thermis, spol. s r.o.
Mateří 14
614 00 Brno
Czech Republic

Tel: +420 545 226 177-184
Fax: +420 545 226 177, 181
E-mail: info@thermis.cz
www.thermis.cz

IČ: 26 88 36 43
DIČ: CZ 26 88 36 43
KOS v Brně, oddíl C, vložka 43349
Komerční banka Brno – Černá Pole

Bolev

AJS, AJD
Hydraulic accumulator safety valve unit

Specification:
Safety valve units are used to protect hydraulic system from overflow.

Model code:

AJ * -- * * -- A
1 2 3 4 5

1. product code: AJ safety valve unit
2. unloading mode: S-standard manual, D- supplied with normal close solenoid ball valve
3. nominal path: 10, 20, 32 mm
4. pressure grade: H1-16 Mpa, H2-25MPa, H3-32MPa
5. Structure type: A-direct acting overflow valve, B-pilot overflow valve
6. Connection thread: M42x2, M60x2, M72x2

Symbol:

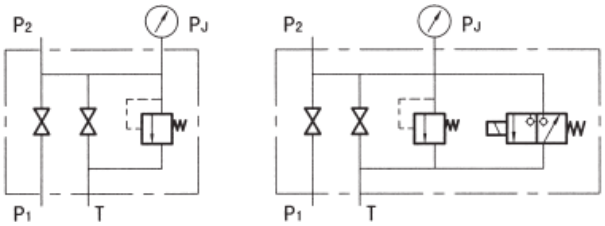

Drawing:

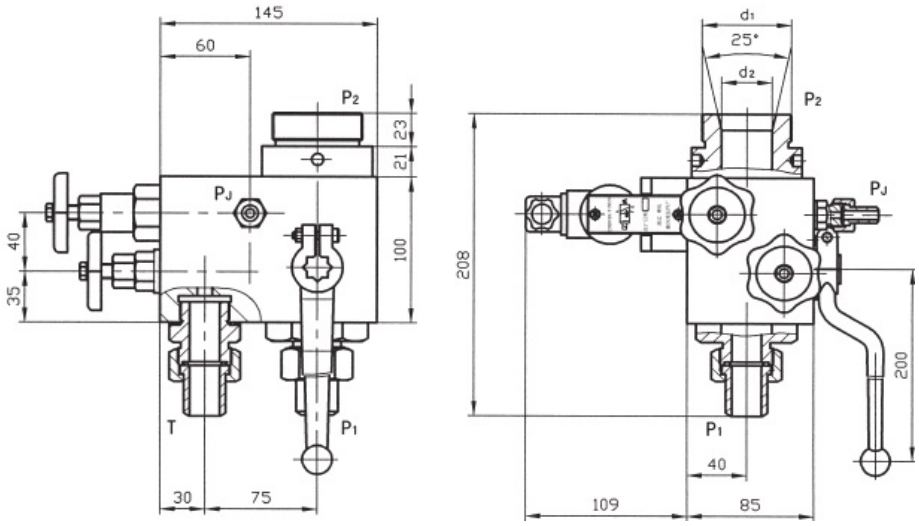

Dimensions:

Type	d1	d2	P1	T	PJ
AJ * -10 * -A	M42x2	Φ 28	JB2099-18	JB2099-14	JB2099-10
AJ * -20 * -A	M60x2	Φ 34	JB2099-28	JB2099-28	JB2099-10
AJ * -32 * -A	M72x2	Φ 34	JB2099-42	JB2099-28	JB2099-10

Thermis, spol. s r.o.
Mateří 14
614 00 Brno
Czech Republic

Tel: +420 545 226 177-184
Fax: +420 545 226 177, 181
E-mail: info@thermis.cz
www.thermis.cz

IČ: 26 88 36 43
DIČ: CZ 26 88 36 43
KOS v Brně, oddíl C, vložka 43349
Komerční banka Brno – Černá Pole

Bolev

AQF
Hydraulic accumulator safety ball valve

Model code:

AQF -- L 25 H_3 -- A
1 2 3 4 5

1. product code: AQF safety ball valve
2. enter oil input: L-straight, LS-right-angle, LW – three-way
3. nominal path: 25, 32, 40 mm
4. pressure grade: H1-10 Mpa, H2-21MPa, H3-32MPa
5. structure type: A-direct acting overflow valve, B-pilot overflow valve

Symbol:

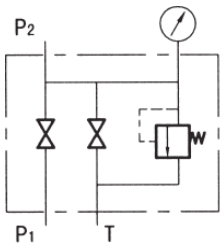

Drawing:

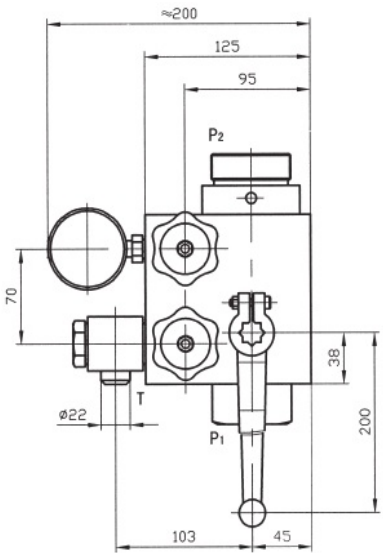

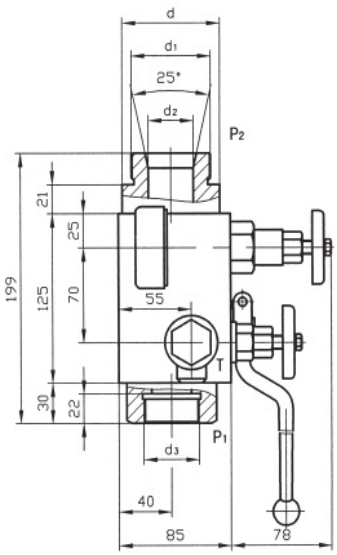

Dimensions:

Type	d	d1	d2	d3
AQF-*25* -A	Φ 60	M42x2	Φ 28	M33x2
AQF-*32* -A	Φ 74	M60x2	Φ 34	M42x2
AQF-*40* -A	Φ 74	M72x2	Φ 34	M48x2

Thermis, spol. s r.o.
Mateří 14
614 00 Brno
Czech Republic

Tel: +420 545 226 177-184
Fax: +420 545 226 177, 181
E-mail: info@thermis.cz
www.thermis.cz

IČ: 26 88 36 43
DIČ: CZ 26 88 36 43
KOS v Brně, oddíl C, vložka 43349
Komerční banka Brno – Černá Pole

Bolev

QDF, QDF-4
Ball solenoid change valve

Specification:
Ball solenoid change valve is used for hydraulic liquid distribution.
System controlled by solenoid drive.

Technical parameters:
nominal pressure:31,5MPa
applicable medium: hydraulic oil
nominal path: 6 mm
working pressure: 12V, 24V, 36V, 220V

Drawings:

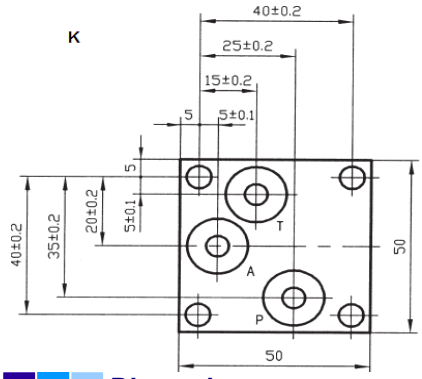

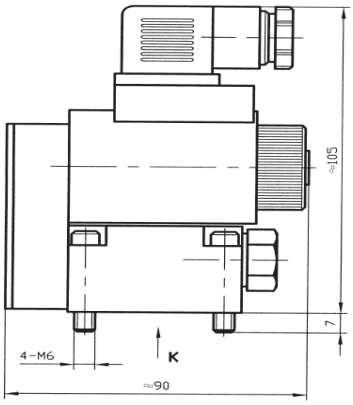

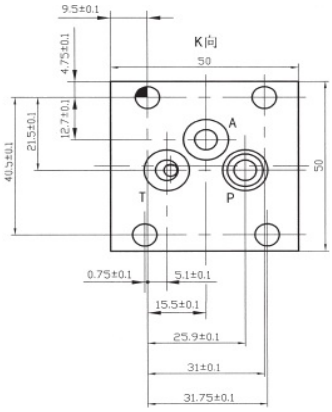

Dimensions:

Name	Type	Valve core	Engine code	Engine symbol	Name	Type	Valve core	Engine code	Engine symbol
two-position three way	23QDF6K/315E*	open	K	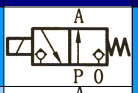	two-position three way	23QDF6K-4/315E*	open	K	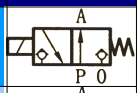
	23QDF6B/315E*	closed	B	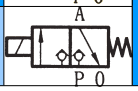		23QDF6B-4/315E*	closed	B	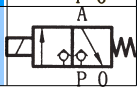

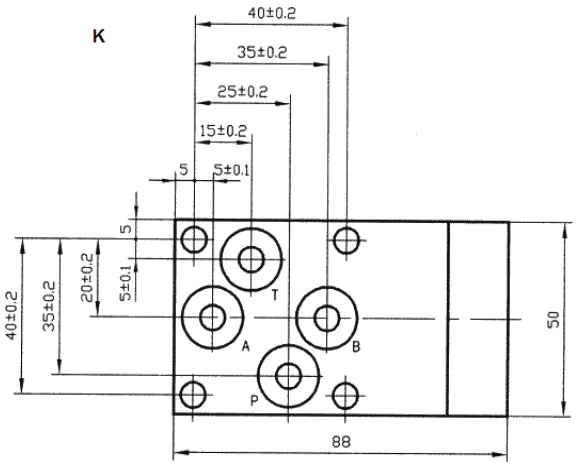

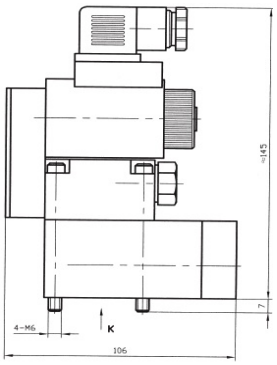

Name	Type	Valve core	Engine code	Engine symbol
two-position four way	24QDF6K/315E*	open	K	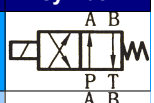
	24QDF6B/315E*	closed	B	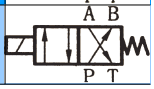

Thermis, spol. s r.o.
Mateří 14
614 00 Brno
Czech Republic

Tel: +420 545 226 177-184
Fax: +420 545 226 177, 181
E-mail: info@thermis.cz
www.thermis.cz

IČ: 26 88 36 43
DIČ: CZ 26 88 36 43
KOS v Brně, oddíl C, vložka 43349
Komerční banka Brno – Černá Pole

Bolev

YJF, JZF
High pressure stop valve

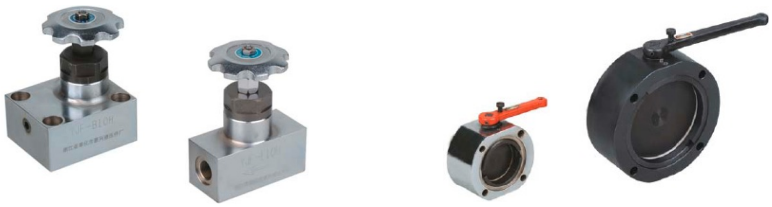

Specification:

High pressure stop valve is used for hydraulic liquid distribution as a closing element.

Model code:

YJF -- * * H
1 2 3 4

1. product code: YJF – high pressure stop valve
2. joint type: L-pipe type, F-flange type, B-board type
3. nominal path: 10, 15, 20, 25, 32, 40, 50 mm
4. pressure grade: H-32MPa

JZF -- * F
1 2 3

1. product code: JZF – stop valve
2. nominal path: 40, 60, 65, 80, 100 mm
3. joint type: F-flange type

Symbol:

Drawings and dimensions:

Type	Hmax	L	D	h	A	A1	B	B1	C	C1	d	d1	d2
YJF-B10H	113	116,5	Φ 100	40	85	70	65	50	18,5	46,5	Φ 22	Φ 10	Φ 11
YJF-B20H	197	130	Φ 120	70	113	97	81	65	22,2	68,5	Φ 35	Φ 20	Φ 17
YJF-B25H	225	135	Φ 120	75	117	112	85	85	24	72	Φ 40	Φ 25	Φ 17
YJF-B32H	246	160	Φ 160	80	127	127	92	92	20,6	71,4	Φ 45	Φ 30	Φ 21

Type	Hmax	h	L	D	d	M
YJF-L10H	116,5	74	90	Φ 100	□ 42	M18x1,5
YJF-L15H	116,5	74	90	Φ 100	□ 42	M22x1,5
YJF-L20H	202	100	120	Φ 120	Φ 60	M27x2
YJF-L25H	220	93	135	Φ 120	Φ 70	M33x2
YJF-L32H	241	113	150	Φ 160	Φ 70	M42x2

Type	Hmax	H1	L	L1	d1	d	D	AxA
YJF-F10H	162,5	74	120	10	Φ 12,5	Φ 18,5	100	54x54
YJF-F15H	181,5	82	132	11	Φ 16	Φ 22,5	120	54x54
YJF-F20H	202	100	140	12	Φ 20	Φ 28,5	120	58x58
YJF-F25H	220	93	185	13	Φ 25	Φ 34,5	120	68x68
YJF-F32H	241	113	204	16	Φ 32	Φ 43,5	160	76x76

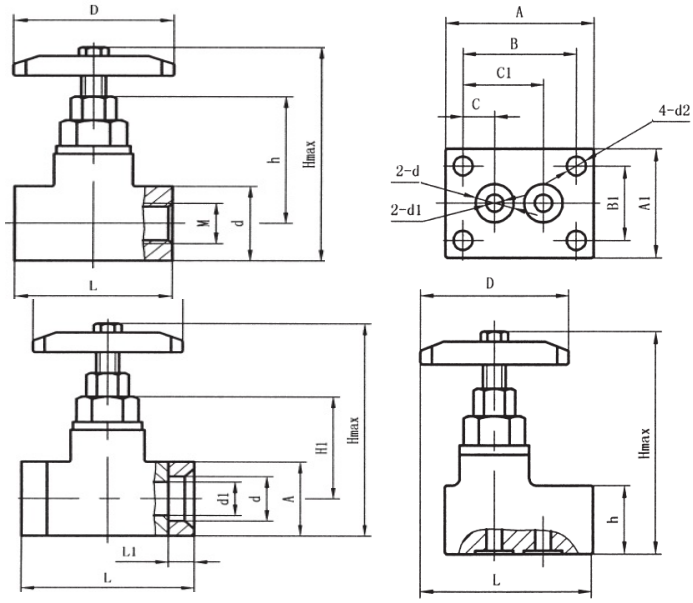

Type	h1	h2	d1	d2	d3	n-d4	Sealing – both ends
JZF-40FA	40	90	Φ44	Φ64	Φ75	4-Φ7	surface of both ends – without o-ring groove
JZF-40FB	40	90	Φ44	Φ70	Φ81	4-Φ7	both ends have 56x3,5 o-ring groove
JZF-60F	45	115	Φ68	Φ92	Φ105	4-Φ7	surface of both ends – without o-ring groove
JZF-65F	50	150	Φ68	Φ108	Φ135	6-Φ11	surface of both ends – without o-ring groove
JZF-80F	50	150	Φ91	Φ120	Φ135	4-Φ9	surface of both ends – without o-ring groove
JZF-100F	55	175	Φ116	Φ148	Φ165	4-Φ9	surface of both ends – without o-ring groove

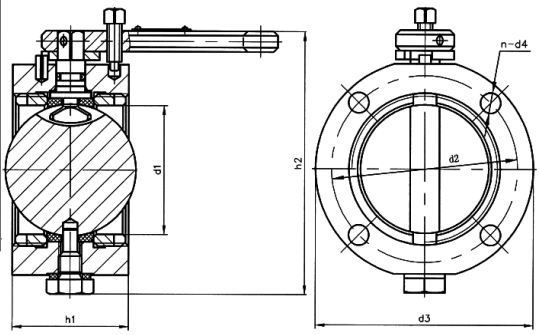

Thermis, spol. s r.o.
Mateří 14
614 00 Brno
Czech Republic

Tel: +420 545 226 177-184
Fax: +420 545 226 177, 181
E-mail: info@thermis.cz
www.thermis.cz

IČ: 26 88 36 43
DIČ: CZ 26 88 36 43
KOS v Brně, oddíl C, vložka 43349
Komerční banka Brno – Černá Pole

JZF-T, JZF-G
High pressure stop valve

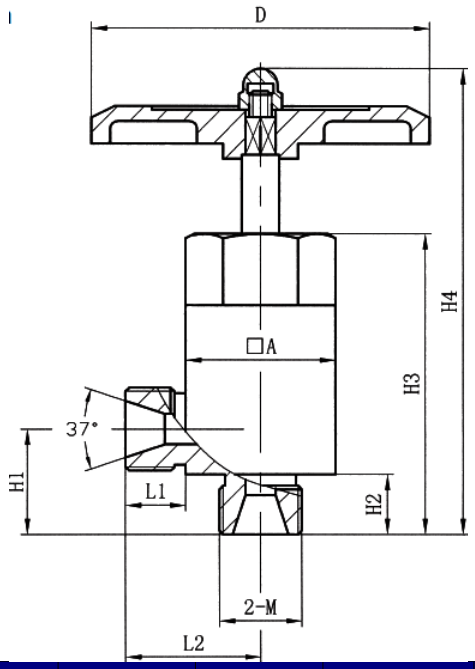

Model code:

JZF -- T *
1 2 3

1. product code: JZF – stop valve
3. nominal path : 10, 15, 25 mm

Technical parameters:

valve body material: 1Cr18Ni9Ti
working pressure: 40 MPa
working medium: hydraulic oil, water
operating temperature: - 40 + 120°C

Symbol:

Drawing:

Dimensions:

Type	L1	L2	H1	H2	H3	H4	□S	D	2-M
JZF-T10	16	36	28	16	80	124,1	40x40	Φ90	2-M22x1,5
JZF-T15	24	44	42	24	92	133,5	40x40	Φ90	2-M27x1,5
JZF-T25	27	52	50	27	119	167	50x50	Φ125	2-M39x1,5

Model code:

JZF -- G * H
1 2 3 4

1. product code: JZF – stop valve ventil
2. joint type: manifold type
3. nominal path: 5,6 mm
4. pressure grade: 70 MPa

Symbol:

Drawing:

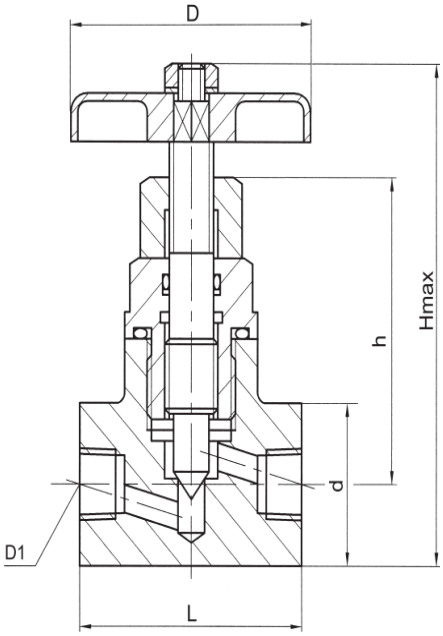

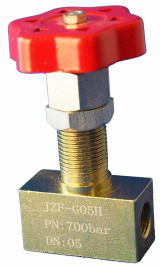

Dimensions:

Type	Hmax	h	L	D	d	D1
JZF-G06H	113,5	70	64	Φ65	□32	NPT1/2 *
JZF-G05H	98	57	50	Φ54	□30	NPT1/4 *

Thermis, spol. s r.o.
Mateří 14
614 00 Brno
Czech Republic

Tel: +420 545 226 177-184
Fax: +420 545 226 177, 181
E-mail: info@thermis.cz
www.thermis.cz

IČ: 26 88 36 43
DIČ: CZ 26 88 36 43
KOS v Brně, oddíl C, vložka 43349
Komerční banka Brno – Černá Pole

Bolev

KF
Pressure gauge switch

Specification:

Used in hydraulic systems for pressure gauge connection, the valve enables closure of pressure inlet.

Model code:

KF	--	L	8	/	*	E
1		2	3		4	5

1. type: pressure gauge switch
2. joint type: thread connection
3. nominal path: 8 mm
4. pressure gauge joint: metric
5. nominal pressure: 32 MPa

Symbol:

Drawing:

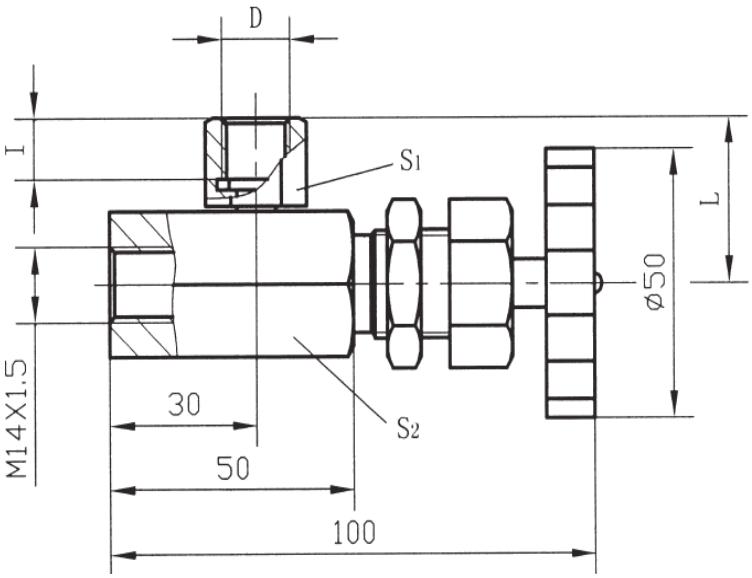

Dimensions:

Type	D	S1	S2	I	L	Pressure gauge diameter	Center of pressure gauge and distance between the switch of pressure gauge and handle center
KF-L8/12E	M12x1,25	27	31	16	31	Φ60	70
KF-L8/14E	M14x1,5	27	31	16	31	Φ60	75
KF-L8/20E	M20x1,5	27	31	16	38	Φ100, Φ150	110,132
KF-L8/30E	M30x1,5	38	46	26	48	Φ260	185
KF-L8/E	Not built-in, indirect joint						

Thermis, spol. s r.o.
Mateří 14
614 00 Brno
Czech Republic

Tel: +420 545 226 177-184
Fax: +420 545 226 177, 181
E-mail: info@thermis.cz
www.thermis.cz

IČ: 26 88 36 43
DIČ: CZ 26 88 36 43
KOS v Brně, oddíl C, vložka 43349
Komerční banka Brno – Černá Pole

Bolev

A-serie
One-way valve

Specification:
One-way valve enables flow only in one direction.

Symbol:

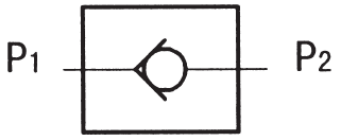

Model code:

DIF -- L * H * (1 2 3 4 5)

1. type: straight check valve
2. connection: thread-thread
3. nominal path: 10, 20, 32 mm
4. nominal pressure: H-32 MPa
5. burst pressure: a=0,04~0,1 MPa
   b=0,2~0,4 MPa

A -- H * * L (1 2 3 4 5)

1. type: pstraight check valve
2. nominal pressure: H-32 MPa
3. burst pressure: a=0,04~0,1 MPa
   b=0,2~0,4 MPa
4. nominal path: 10, 20, 32 mm
5. connection: thread-thread

Drawing:

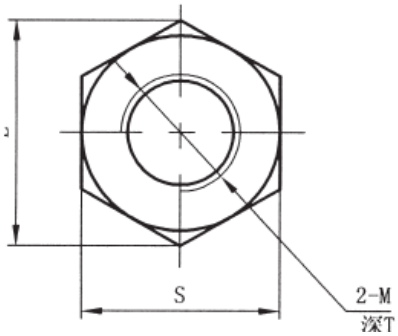

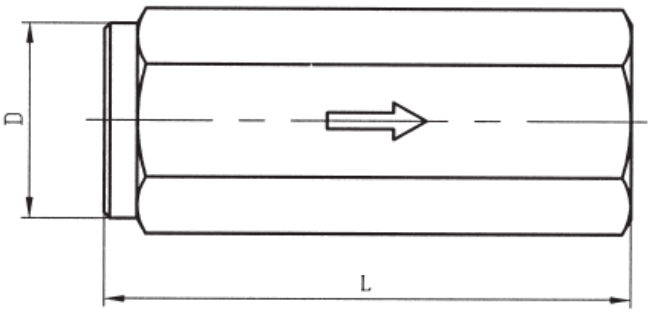

Dimensions:

Nominal path		Type	Dimensions (mm)				
(mm)	(inch)		L	E	S	T	M
10	3/8 “	DIF-L10H*	75	34,3	30	15	M18x1,5
		A-H*10L	85	41,5	36	18	M22x1,5
20	3/4 “	DIF-L20H*	102	48,5	42	20	M27x2
		A-H*20L	106	55,4	48	22	M33x2
32	1 3/4 “	DIF-L32H*	140	72,8	63	25	M42x2
		A-H*32L	128	74,9	65	24	M48x2

Thermis, spol. s r.o.
Mateří 14
614 00 Brno
Czech Republic

Tel: +420 545 226 177-184
Fax: +420 545 226 177, 181
E-mail: info@thermis.cz
www.thermis.cz

IČ: 26 88 36 43
DIČ: CZ 26 88 36 43
KOS v Brně, oddíl C, vložka 43349
Komerční banka Brno – Černá Pole

Bolev

S-series
One-way valve

Specification:
One-way valve enables frow only in one direction.

Model code:

S * A * / *
1 2 3 4 5

1. type: S-series – straight one-way check valve
2. nominal path: 06, 08, 10, 15, 20, 25, 32 mm
3. structure model: A=duct type, B=board type
4. burst pressure: without spring 1=0,05 MPa, 2=0,15 MPa, 3=0,3MPa, 5=0,5 MPa
5. connection thread: 1=metric, 2=BSP

Technical parameters:
Working pressure: 31,5MPa
Operating temperature: - 30~ + 80°C
Applicable medium: hydraulic oil

Symbol:
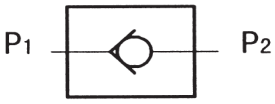

Drawing:
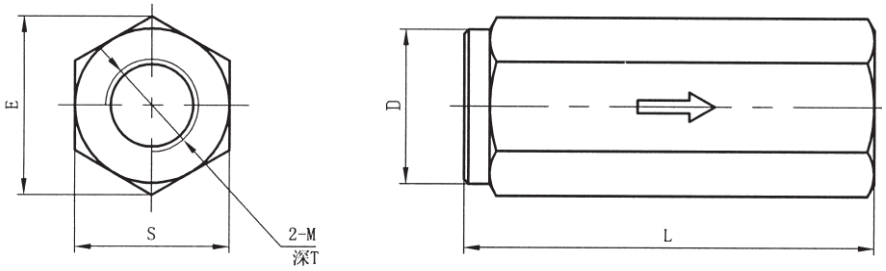

Dimensions:

Diameter	Type	Max. flow (l/min)	Dimensions (mm)				
			L	E	S	T	M
06	S06A*/1	15	58	22	19	12	M14x1,5
	S06A*/2						G1/4“
08	S08A*/1	30	58	28	24	12	M18x1,5
	S08A*/2						G3/8“
10	S10A*/1	40	72	34,5	30	14	M22x1,5
	S10A*/2						G1/2“
15	S15A*/1	120	85	41,5	36	16	M27x2
	S15A*/2						G3/4“
20	S25A*/1	200	98	53	46	18	M33x2
	S25A*/2						G1“
25	S25A*/1	300	120	69	60	20	M42x2
	S25A*/2						G1 1/4“
30	S30A*/1	400	132	75	65	22	M48x2
	S30A*/2						G1 1/4“

Thermis, spol. s r.o.
Mateří 14
614 00 Brno
Czech Republic

Tel: +420 545 226 177-184
Fax: +420 545 226 177, 181
E-mail: info@thermis.cz
www.thermis.cz

IČ: 26 88 36 43
DIČ: CZ 26 88 36 43
KOS v Brně, oddíl C, vložka 43349
Komerční banka Brno – Černá Pole

Bolev

V-serie
One-way valve

Specification:
One-way valves enable flow only in one direction.

Model code:

VU -- * -- * / * -- *
1 2 3 4 5

1. type: V-series – straight one-way check valve
2. nominal path: 08, 10, 12, 16, 20, 25, 30, 40 mm
3. surface: 01=zinc-plated, 02=phosphoric polish, 03= hard chromium plated, 04=bluing
4. connection thread: 1=metric, 2=BSP
5. burst pressure: 0,05 MPa

Symbol:

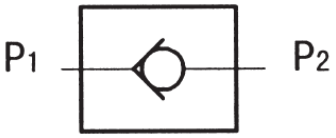

Drawing:

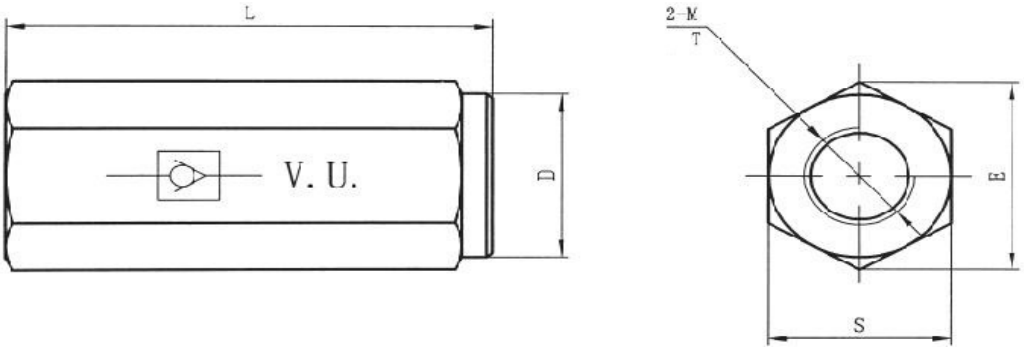

Dimensions:

Dia meter	Type	Max. flow (l/min)	Burst pressure (bar)	PN (bar)	Dimensions (mm)					
					L	E	S	D	T	M (NPT)
08	VU-08***	30	±0,4/0,7	500	62	21,5	19	19	12	1/4“
10	VU-10***	45	±0,4/0,7	500	68	27,5	24	24	14	3/8“
12	VU-12***	70	±0,4/0,7	500	77	34,5	30	30	15	1/2“
16	VU-16***	110	±0,4/0,7	400	88	41,5	36	36	16	3/4“
20	VU-20***	160	±0,4/0,7	350	105	47	41	41	18	1“
25	VU-25***	210	±0,4/0,7	350	130	63	55	55	20	1¹/4“
30	VU-30***	320	±0,4/0,7	350	138	75	65	65	22	1¹/2“
40	VU-40***	460	±0,4/0,7	250	160	92	80	80	24	2“

Thermis, spol. s r.o.
Mateří 14
614 00 Brno
Czech Republic

Tel: +420 545 226 177-184
Fax: +420 545 226 177, 181
E-mail: info@thermis.cz
www.thermis.cz

IČ: 26 88 36 43
DIČ: CZ 26 88 36 43
KOS v Brně, oddíl C, vložka 43349
Komerční banka Brno – Černá Pole

Bolev

BLV-BFD, BLV-DBFD

Counter balance valve BLV-BFD 10/35, BLV-DBFD 10/35

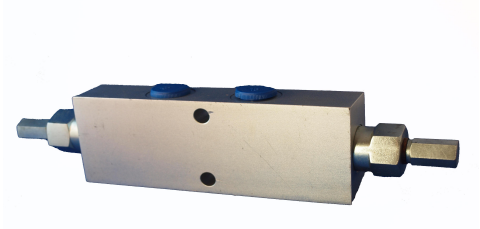

Specification:

Counter balance valve are continuously regulated valves. Loads can be controlled in reduce or limited.

Technical parameters:

Nominal pressure: 32 MPa
Inner diameter: 9mm(BFD),10mm(DBFD)
Flow: 120l/min
Control pressure: 2-4,5 MPa

Symbol:

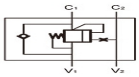

BFD

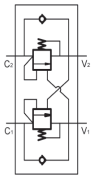

DBFD

Drawing:

BFD

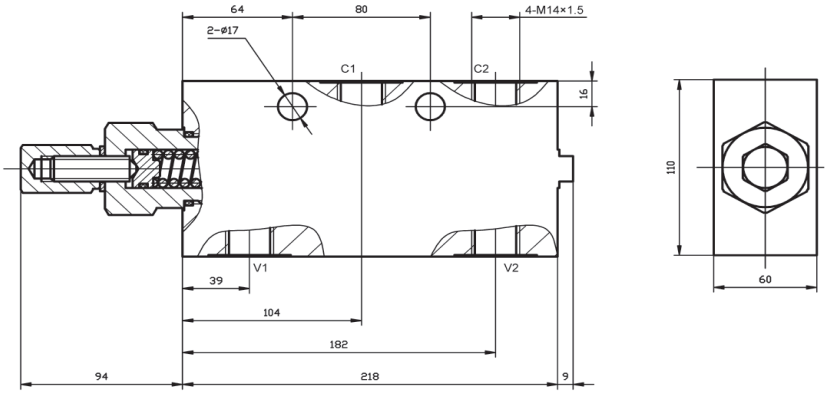

DBFD

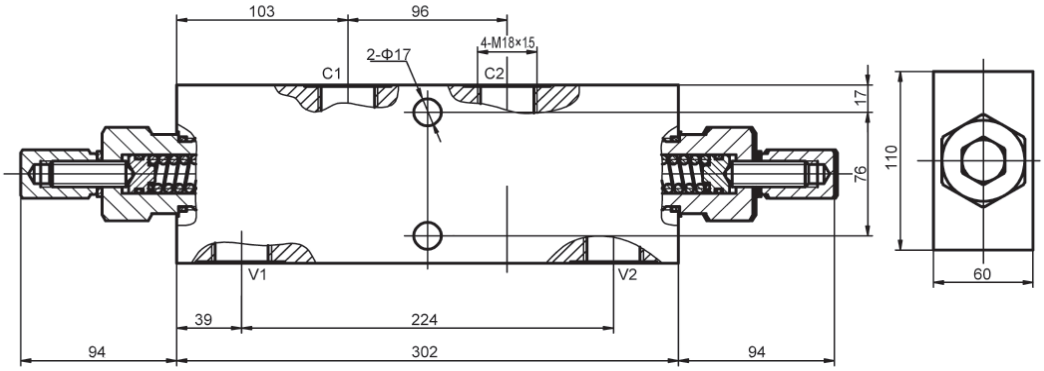

Thermis, spol. s r.o.
Mateří 14
614 00 Brno
Czech Republic

Tel: +420 545 226 177-184
Fax: +420 545 226 177, 181
E-mail: info@thermis.cz
www.thermis.cz

IČ: 26 88 36 43
DIČ: CZ 26 88 36 43
KOS v Brně, oddíl C, vložka 43349
Komerční banka Brno – Černá Pole

Bolev

SF
Shuttle valve

Specification:
Shuttle valve selects the higher pressure from two pressure branches of a manifold.

Technical parameters:
Nominal path: 6, 12 mm
Nominal flow: 25, 40 L/min
Nominal pressure: 32 MPa
Applicable medium: hydraulic oil

Symbol:

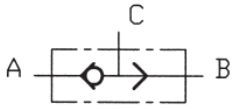

Drawing:

SF*/**

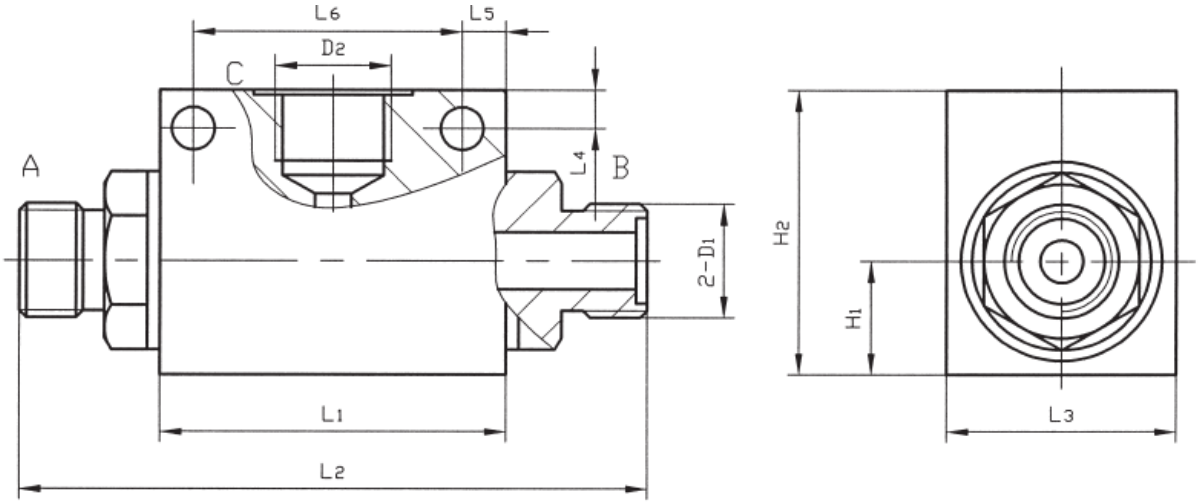

Dimensions:

Type	D1	D2	L1	L2	L3	L4	L5	L6	H1	H2
SF06/36W	M16x1,5	M16x1,5	48	87	32	/	/	/	16	40
SF12/31	M22x1,5	M18x1,5	65	115	35	8	10	45	18	48

Thermis, spol. s r.o.
Mateří 14
614 00 Brno
Czech Republic

Tel: +420 545 226 177-184
Fax: +420 545 226 177, 181
E-mail: info@thermis.cz
www.thermis.cz

IČ: 26 88 36 43
DIČ: CZ 26 88 36 43
KOS v Brně, oddíl C, vložka 43349
Komerční banka Brno – Černá Pole

Bolev

VU/SF
Shuttle valve

Specification:
Shuttle valve chooses the higher pressure from two pressure branches of a manifold.

Symbol:

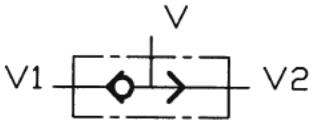

Drawing:

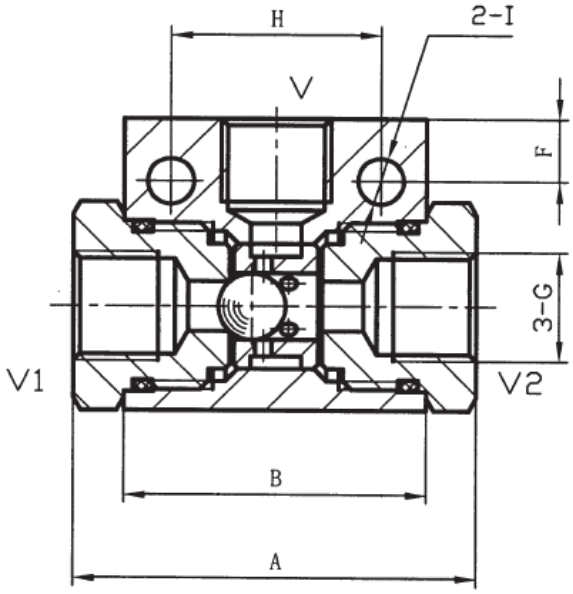

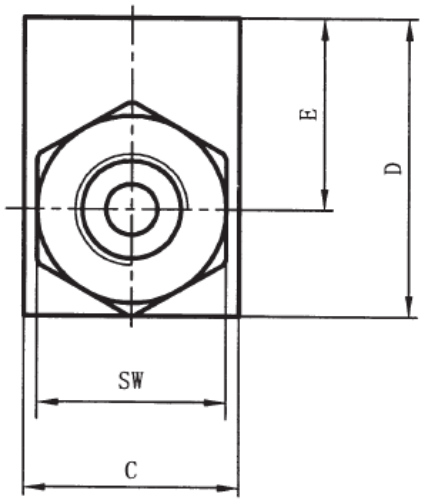

Dimensions:

Type	A	B	C	D	E	F	G		H	I	SW
VU/SF-01-1/4	48	36	25	35	22,5	7,5	G1/4	NPT1/4	25	5,5	22
VU/SF-02-3/8	59	45	30	45	30	8	G3/8	NPT3/8	29	6,5	27
VU/SF-03-1/2	90	57	35	50	32,5	8,5	G1/2	NPT1/2	36	6,5	32
VU/SF-04-3/4	113	62	45	60	37	6,5	G3/4	NPT3/4	50	8,5	41
VU/SF-05-1	120	80	50	80	54,5	11	G1	NPT1	60	10,5	46

Technical parameters:

Type	VU/SF-01-1/4	VU/SF-02-3/8	VU/SF-03-1/2	VU/SF-04-3/4	VU/SF-05-1
Max. pressure (MPa)	50	50	50	35	30
Max. flow (l/min)	20	45	80	110	150

Thermis, spol. s r.o.
Mateří 14
614 00 Brno
Czech Republic

Tel: +420 545 226 177-184
Fax: +420 545 226 177, 181
E-mail: info@thermis.cz
www.thermis.cz

IČ: 26 88 36 43
DIČ: CZ 26 88 36 43
KOS v Brně, oddíl C, vložka 43349
Komerční banka Brno – Černá Pole

Bolev

STU
Throttle check valve

Specification:
Throttle check valves are used for flow regulation. Throttling size is dependent on flow, temperature and rate of flow.

Symbol:

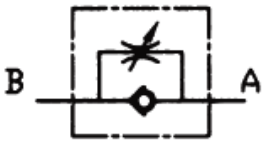

Drawing:

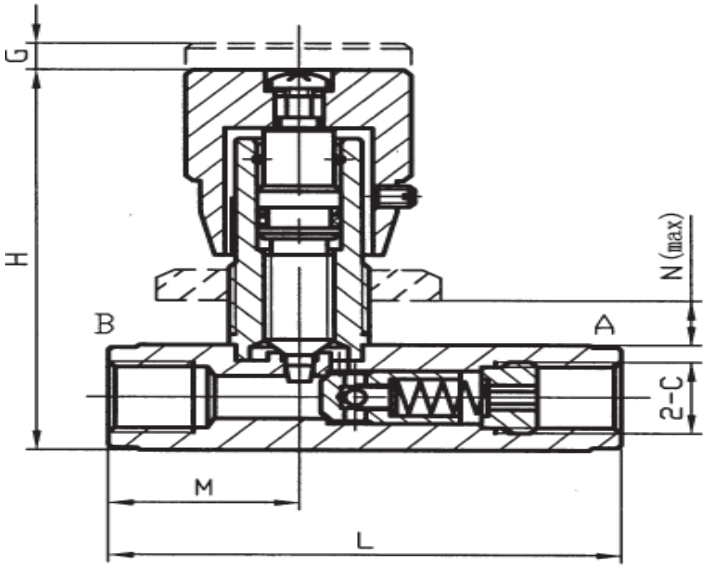

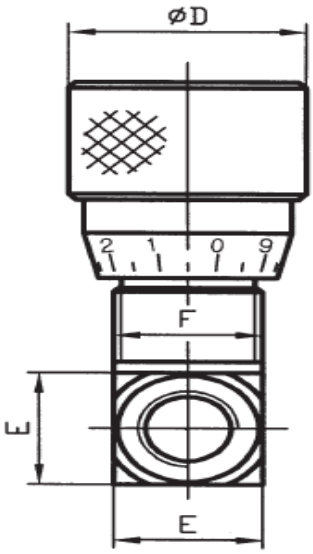

Dimensions:

Type	C		L	H	D	E	F*	G	M	N
STU0400	G1/4	NPT1/4	73	72	32	20	M20x1	5	27	7S
STU0600	G3/8	NPT3/8	82	80	32	25	M25x1,5	9	31	7
STU0800	G1/2	NPT1/2	98	92	45	30	M30x1,5	9	36,5	9
STU1200	G3/4	NPT3/4	112	100	45	40	M35x1,5	10	42	11
STU1600	G1	NPT1	142	122	45	45	M40x1,5	12	51	15

Technical parameters:

Type	STU0400	STU0600	STU0800	STU1200	STU1600
Max. pressure (MPa)	40	40	40	40	32
Max. flow (l/min)	12	30	50	85	150

Thermis, spol. s r.o.
Mateří 14
614 00 Brno
Czech Republic

Tel: +420 545 226 177-184
Fax: +420 545 226 177, 181
E-mail: info@thermis.cz
www.thermis.cz

IČ: 26 88 36 43
DIČ: CZ 26 88 36 43
KOS v Brně, oddíl C, vložka 43349
Komerční banka Brno – Černá Pole

Bolev

STB
Throttle valve

Specification:
Throttle check valves are used for flow regulation. Throttling size is dependent on flow, temperature and rate of flow.

Symbol:

Drawing:

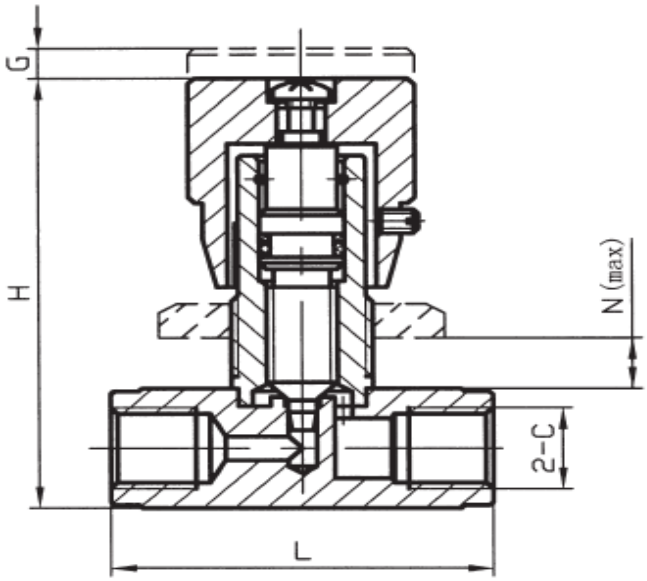

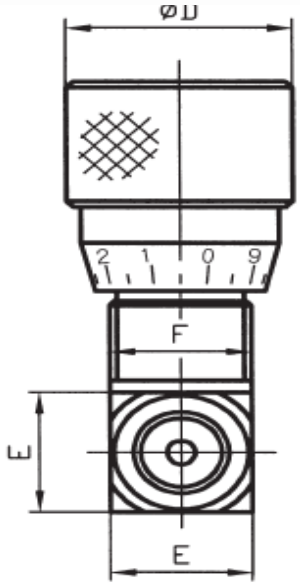

Dimensions:

Type	C		L	H	D	E	F*	G	N
STB0400	G1/4	NPT1/4	54	72	32	20	M20x1	5	7
STB0600	G3/8	NPT3/8	62	80	32	25	M25x1,5	9	7
STB0800	G1/2	NPT1/2	73	92	45	30	M30x1,5	9	9
STB1200	G3/4	NPT3/4	84	100	45	40	M35x1,5	10	11
STB1600	G1	NPT1/2	102	122	45	45	M40x1,5	12	15

Technical parameters:

Type	STB0400	STB0600	STB0800	STB1200	STB1600
Max.pressure (MPa)	40	40	40	40	32
Max. flow (l/min)	12	30	50	85	150

Thermis, spol. s r.o.
Mateří 14
614 00 Brno
Czech Republic

Tel: +420 545 226 177-184
Fax: +420 545 226 177, 181
E-mail: info@thermis.cz
www.thermis.cz

IČ: 26 88 36 43
DIČ: CZ 26 88 36 43
KOS v Brně, oddíl C, vložka 43349
Komerční banka Brno – Černá Pole

Bolev

QY8C, QY16A
hydraulický zámek jednostranný

Specifikace:
Hydraulické zámky se používají pro uzavření průtoku v jednom směru. Ventil umožňuje průtok v jednom směru a zablokovaní v druhém směru, dokud není odblokován ovládacím tlakem.

Technické parametry:
Tlakové zatížení: 32MPa
Nominální velikost: 6 mm
Jmenovitý průtok: 25 l/min
Použitelné medium: hydraulický olej

Výkresy:

QY8C

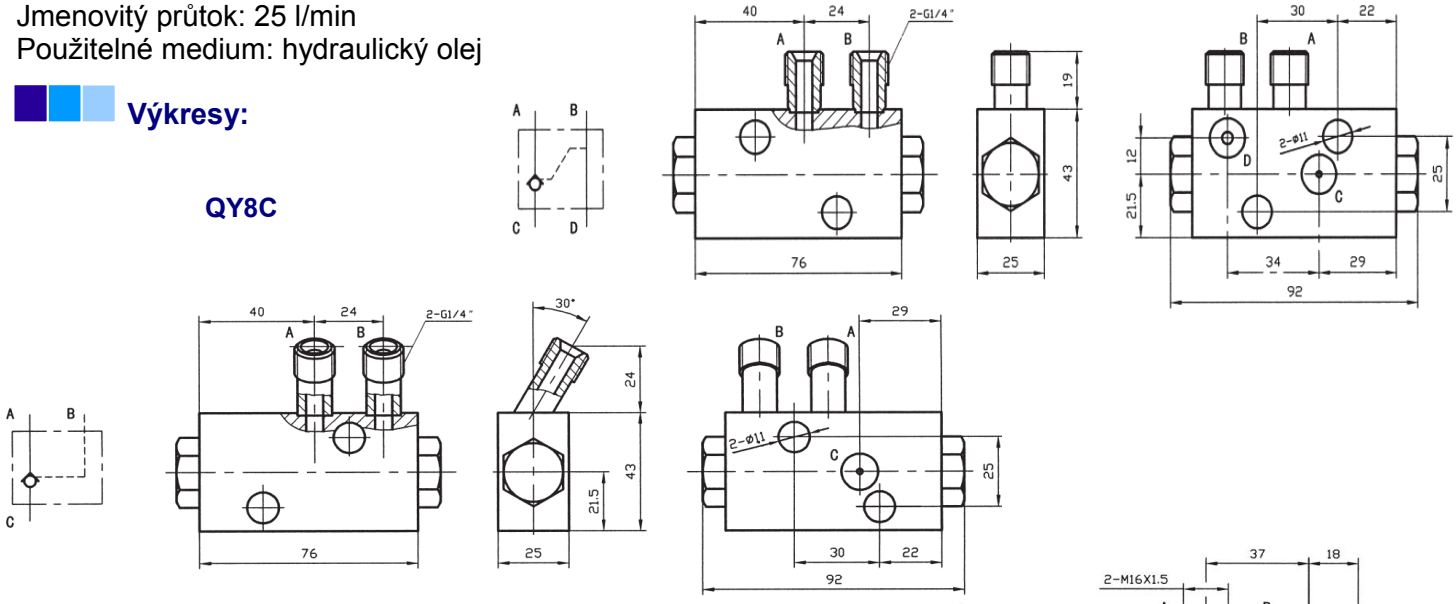

QY16A-6429-1

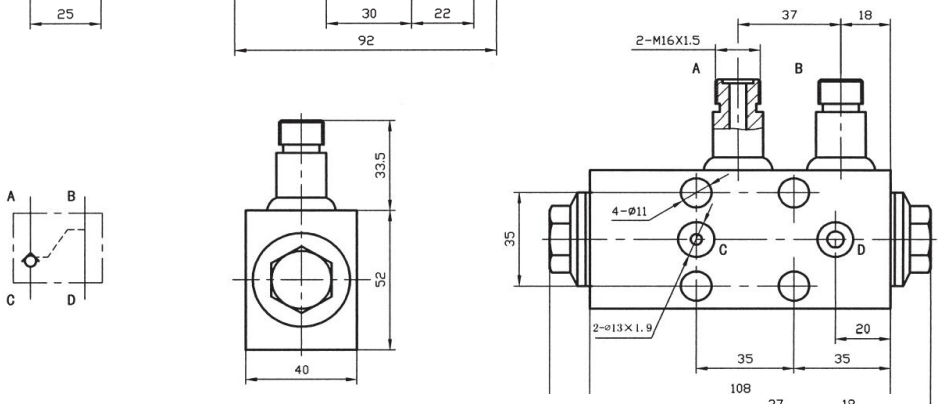

QY16A-6429-50T
QLY25BT-647

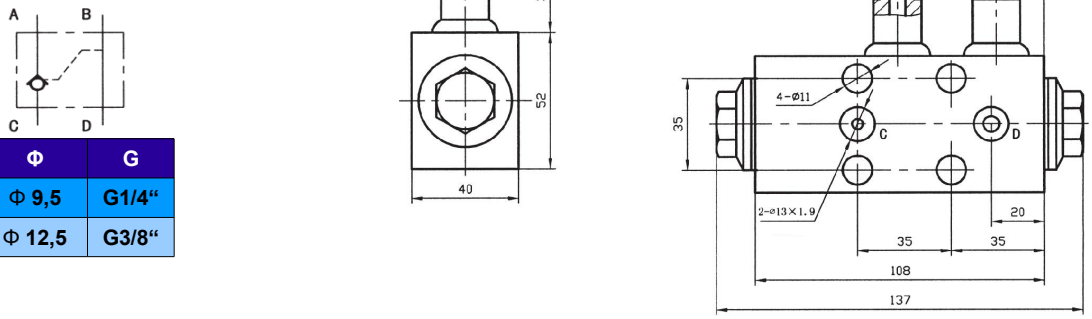

Typ	Φ	G
QY16A-6429-50T	Φ 9,5	G1/4“
QLY25BT-647	Φ 12,5	G3/8“

Thermis, spol. s r.o.
Mateří 14
614 00 Brno
Czech Republic

Tel: +420 545 226 177-184
Fax: +420 545 226 177, 181
E-mail: info@thermis.cz
www.thermis.cz

IČ: 26 88 36 43
DIČ: CZ 26 88 36 43
KOS v Brně, oddíl C, vložka 43349
Komerční banka Brno – Černá Pole

Bolev

DPOCV, SO-H10L-02
Dual pilot operating check valve

Specification:
Hydraulic pilot valves are used to stop flow in both derections.

Technical parameters:
Nominal pressure: 32MPa
Nominal joint: 6 mm
Rated flow: 25 l/min
Applicable medium: hydraulic oil

Symbols:

DPOCV

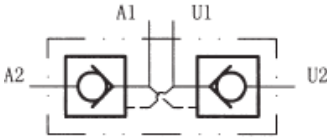

SO-H10L-02

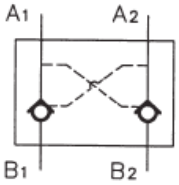

Drawings:

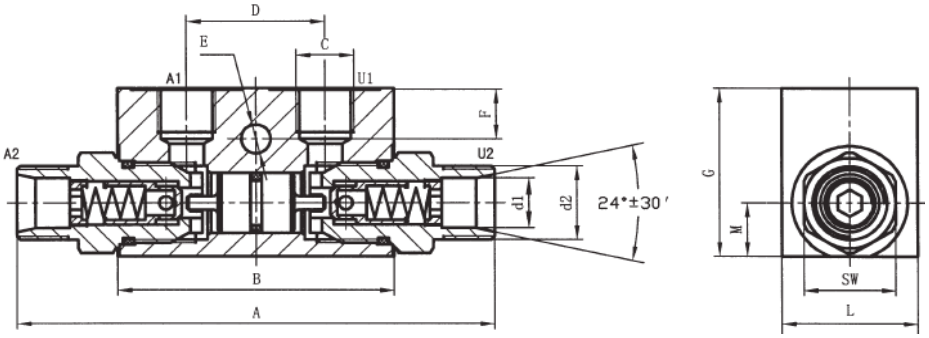

DPOCV
SO-H10L-02

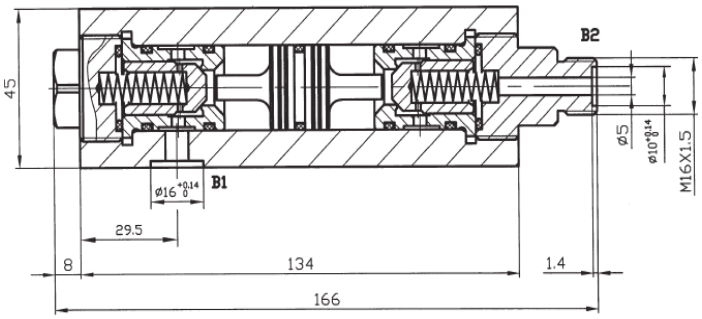

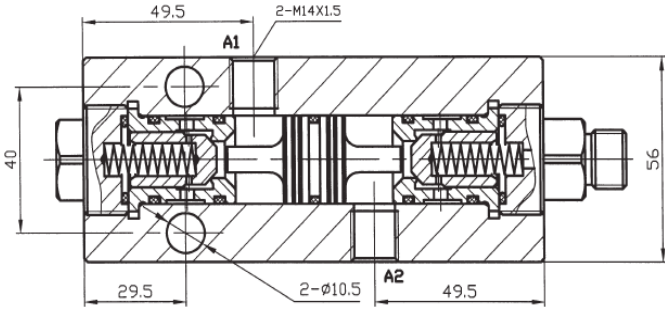

Dimensions and technical parameters:

Type	A	B	C		D	E	F	G	L	M	SW	d1	d2	Max. pressure (MPa)	Max. flow (l/min)	Area scale	Burst pressure (MPa)
DPOCV-1/4-12L	115	68	G1/4	NPT1/4	38	7	7	40	30	13	24	12,3	M18x1,5	35	20	1:4,5	0,35
DPOCV-3/8-12L	115	68	G3/8	NPT3/8	38	7	7	40	30	13	24	12,3	M18x1,5	35	20	1:4,5	0,35
DPOCV-3/8-15L	139	80	G3/8	NPT3/8	40	8,5	15	50	40	16	27	15,3	M22x1,5	35	50	1:4	0,35
DPOCV-1/2-15L	139	80	G1/2	NPT1/2	40	8,5	15	50	40	16	27	15,3	M22x1,5	35	50	1:4	0,35
DPOCV-1/2-18L	163	90	G1/2	NPT1/2	40	8,5	15	60	40	20	30	18,3	M26x1,5	30	80	1:4	0,35

Thermis, spol. s r.o.
Mateří 14
614 00 Brno
Czech Republic

Tel: +420 545 226 177-184
Fax: +420 545 226 177, 181
E-mail: info@thermis.cz
www.thermis.cz

IČ: 26 88 36 43
DIČ: CZ 26 88 36 43
KOS v Brně, oddíl C, vložka 43349
Komerční banka Brno – Černá Pole

Bolev

Dual pilot operating check valves

YS6

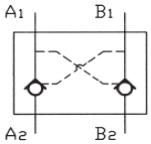

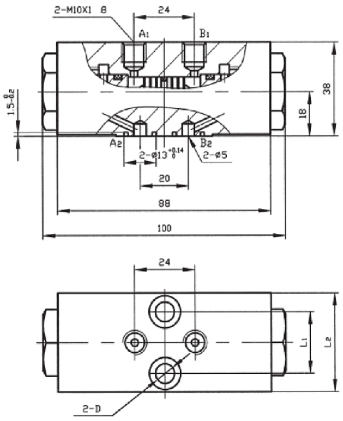

Nominal pressure: 32 MPa
Nominal joint: 6 mm
Rated flow: 25l/min
Medium: Hydraulic oil

YSS-6

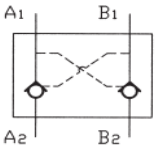

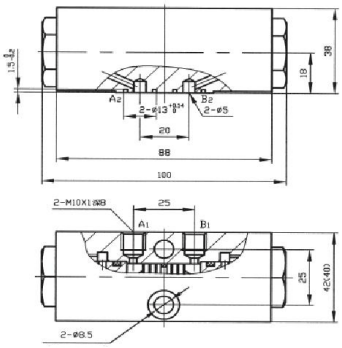

Nominal pressure: 32 MPa
Nominal joint: 6 mm
Rated flow: 25l/min
Medium: Hydraulic oil

F42

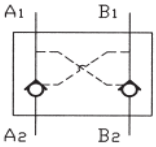

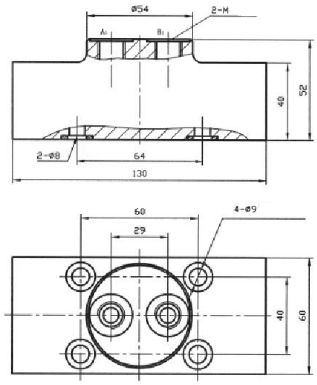

Nominal pressure: 32 MPa
Nominal joint: 8 mm
Rated flow: 40l/min
Medium: Hydraulic oil

BQ2201

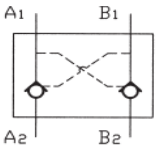

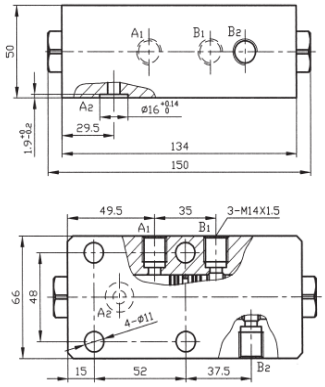

Nominal pressure: 32 MPa
Nominal joint: 8mm
Rated flow: 40l/min
Medium: Hydraulic oil

Thermis, spol. s r.o.
Mateří 14
614 00 Brno
Czech Republic

Tel: +420 545 226 177-184
Fax: +420 545 226 177, 181
E-mail: info@thermis.cz
www.thermis.cz

IČ: 26 88 36 43
DIČ: CZ 26 88 36 43
KOS v Brně, oddíl C, vložka 43349
Komerční banka Brno – Černá Pole

Bolev

23SHX-06
Two-position hydraulic hand control valve

Specification:
Two-position hydraulic valves are used to stop flow in both directions.

Technical parameters:
Nominal pressure: 21MPa
Nominal path: 6 mm
Screw thread connection
Options

Symbol:

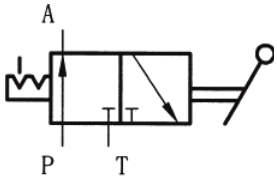

Drawing:

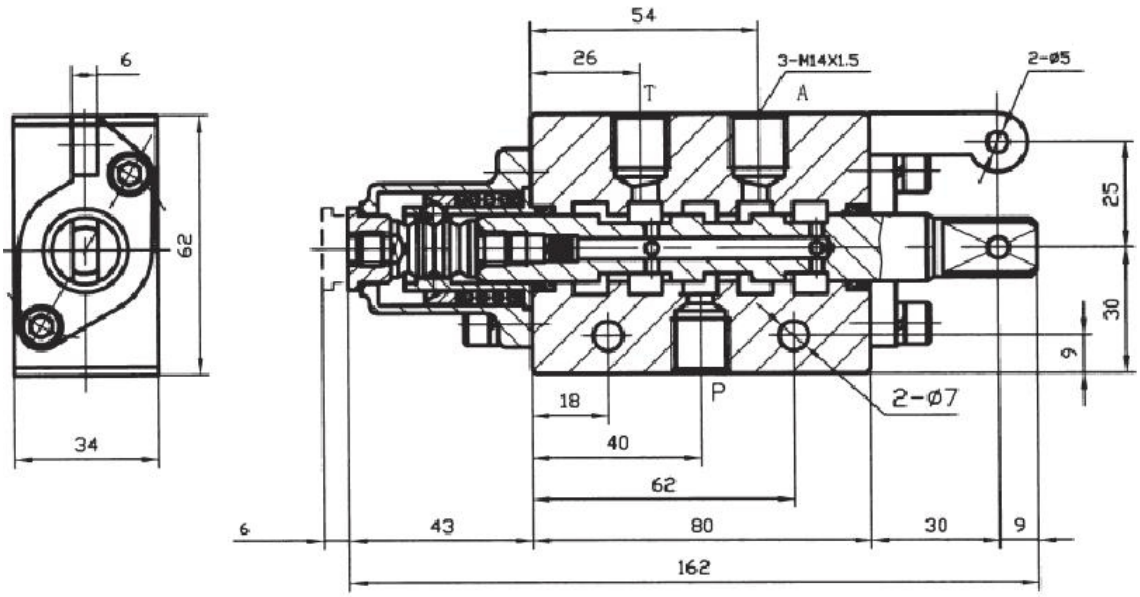

Thermis, spol. s r.o.
Mateří 14
614 00 Brno
Czech Republic

Tel: +420 545 226 177-184
Fax: +420 545 226 177, 181
E-mail: info@thermis.cz
www.thermis.cz

IČ: 26 88 36 43
DIČ: CZ 26 88 36 43
KOS v Brně, oddíl C, vložka 43349
Komerční banka Brno – Černá Pole

Bolev

SQ1-121, Q-serie, QY8C-091-5
Balance valves

Technical parameters:

SQ1-121
Nominal joint: 8 mm
Nominal flow: 40 l/min
Nominal pressure: 25 MPa
Pressure damage: ≤ 0,5 MPa
Inner leakage ≤ 0,5 ml/min

Q-serie
Nominal joint: 15, 25 mm
Nominal flow: 63, 160 l/min
Nominal pressure: 31,5 MPa
Control pressure: 4,5 MPa

QY8C-091-5
Nominal flow: 100 l/min
Nominal pressure: 20 MPa
Maximum pressure: 28 MPa
Control pressure: 4,5 MPa

Symbol:

QY8C-091-5 Q-serie SQ1-121

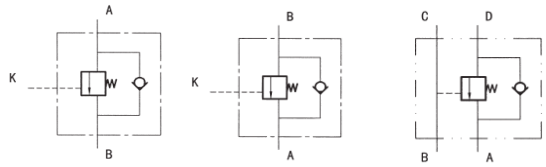

QY8C-091-5

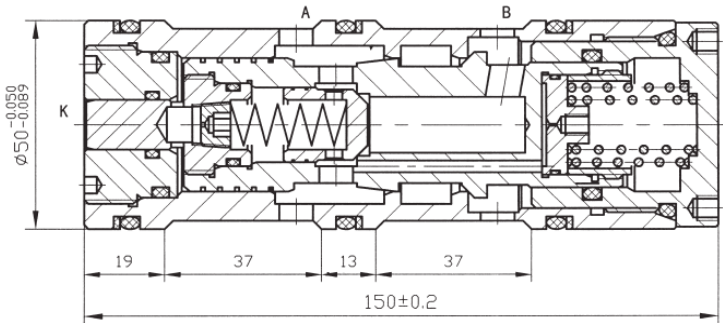

Drawings:

SQ1-121

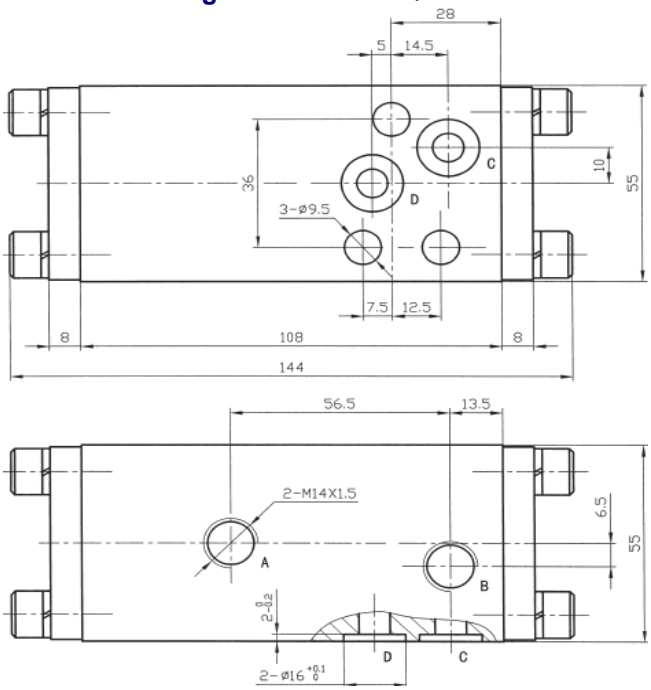

Q-serie

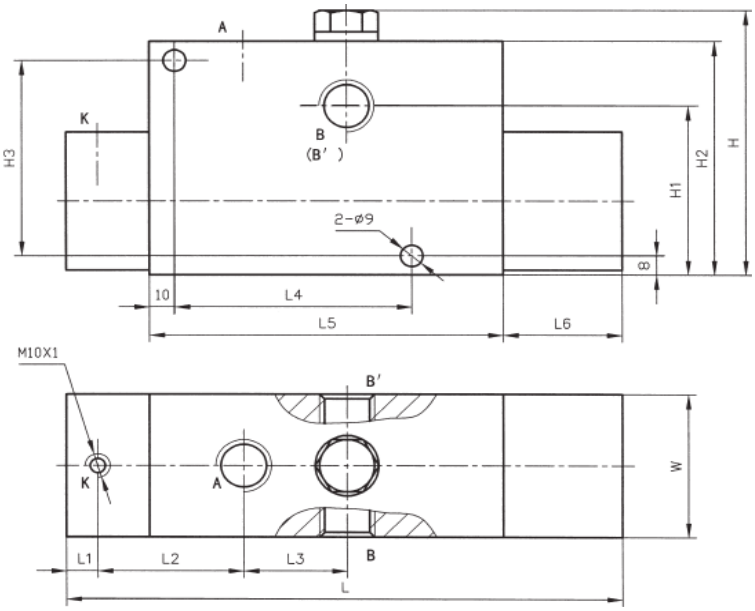

Dimensions Q-serie:

Type	W	L	L1	L2	L3	L4	L5	L6	H	H1	H2	H3	Hole a	Hole B	Hole B´	Nominal flow
Q84-12B-74	60	220,5	14	57,5	41	94	140,5	47	111	71	98	82	M22x1,5	M22x1,5	-	63 l/min
Q84-12B-75	60	220,5	14	57,5	41	94	140,5	47	111	71	98	82	M22x1,5	M22x1,5	-	63 l/min
Q8-12-28-0	65	225,5	14	69	46,5	100	160	32	112	76	106	90	M27x2	M27x2	-	63 l/min
PHY-G25L-C	65	232	11	58	46	100	150	41,5	112	76	106	90	M33x2	-	M33x2	100 l/min

Thermis, spol. s r.o.
Mateří 14
614 00 Brno
Czech Republic

Tel: +420 545 226 177-184
Fax: +420 545 226 177, 181
E-mail: info@thermis.cz
www.thermis.cz

IČ: 26 88 36 43
DIČ: CZ 26 88 36 43
KOS v Brně, oddíl C, vložka 43349
Komerční banka Brno – Černá Pole

Bolev

DL8, DLL8CYF,DPC26A/5,QYZP20/10

Multiple Directional Control Valve

Technical parameters:

DL8, DL8G, DL8CYF

Rated pressure: 21MPa

Nominal flow: DL8, DL8G, QYZP20/10: (P→V)100 l/min DL8CYF: (P→V)120 l /min

(P→V, C→T)80 l/min (P→V)80 l/min

DPC26A/5

Nominal join: 10/15 mm

Nominal flow: 70/40 l/min

Working pressure: 31/25 MPa

Drawing:

DL8B

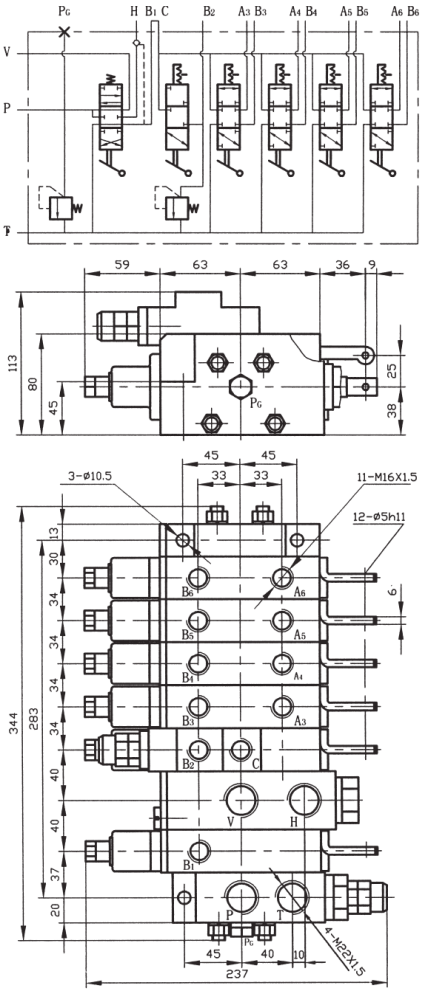

DL8P

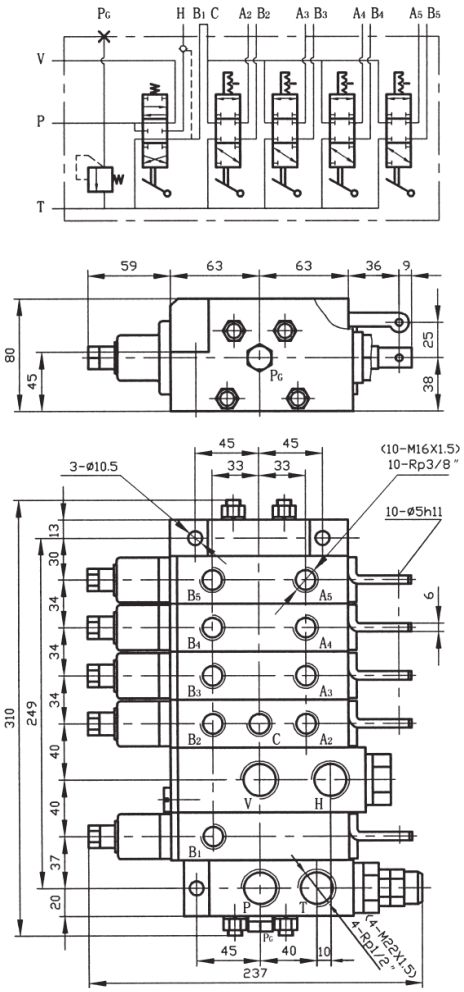

DL8P-5

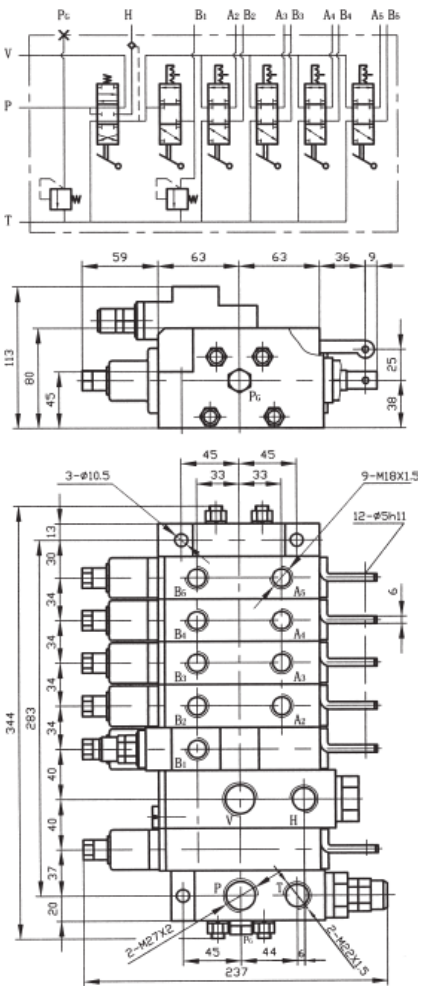

Thermis, spol. s r.o.
Mateří 14
614 00 Brno
Czech Republic

Tel: +420 545 226 177-184
Fax: +420 545 226 177, 181
E-mail: info@thermis.cz
www.thermis.cz

IČ: 26 88 36 43
DIČ: CZ 26 88 36 43
KOS v Brně, oddíl C, vložka 43349
Komerční banka Brno – Černá Pole

Bolev

CYF
Cartridge overflow valve

Technical parameters:
Nominal join: 10, 15 mm
Nominal pressure: 31,5 MPa
Pressure range: 3~31 MPa
Rated flow: 40, 63 l/min
Applicable medium: hydraulic oil

Symbol:

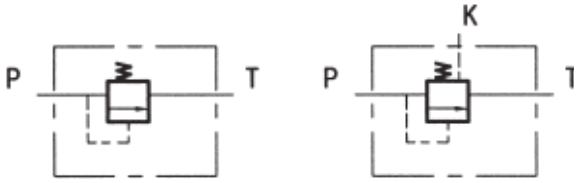

Drawing:

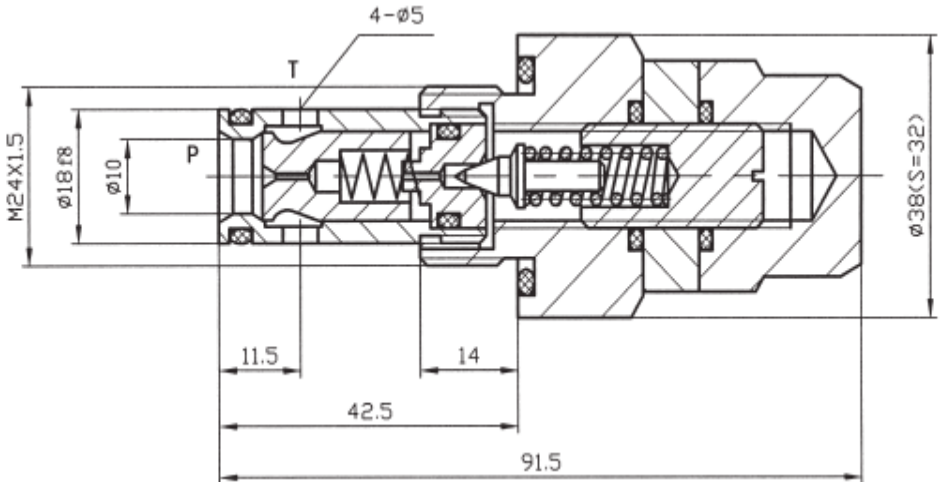

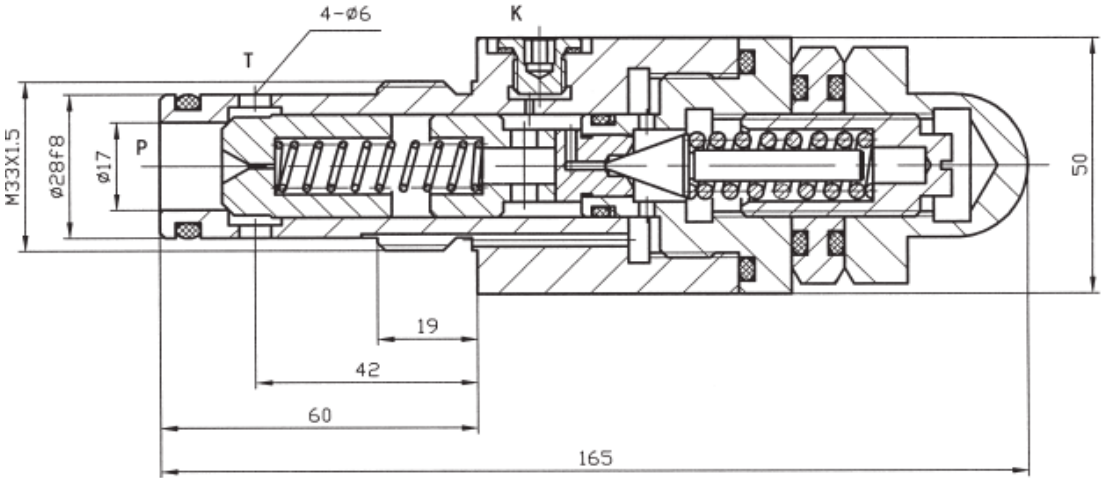

Thermis, spol. s r.o.
Mateří 14
614 00 Brno
Czech Republic

Tel: +420 545 226 177-184
Fax: +420 545 226 177, 181
E-mail: info@thermis.cz
www.thermis.cz

IČ: 26 88 36 43
DIČ: CZ 26 88 36 43
KOS v Brně, oddíl C, vložka 43349
Komerční banka Brno – Černá Pole

Bolev

XYF
Cartridge unloading relief valve

Specification:
Unloading relief valve is used to protect cartridge from overload.

Technical parameters:
Nominal join: 10, 15 mm
Pressure range: 3~25 MPa
Rated flow: 40, 63 l/min
Applicable medium: hydraulic oil

Symbol:

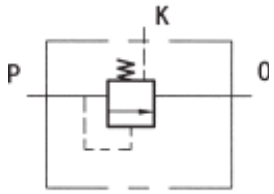

Drawing:

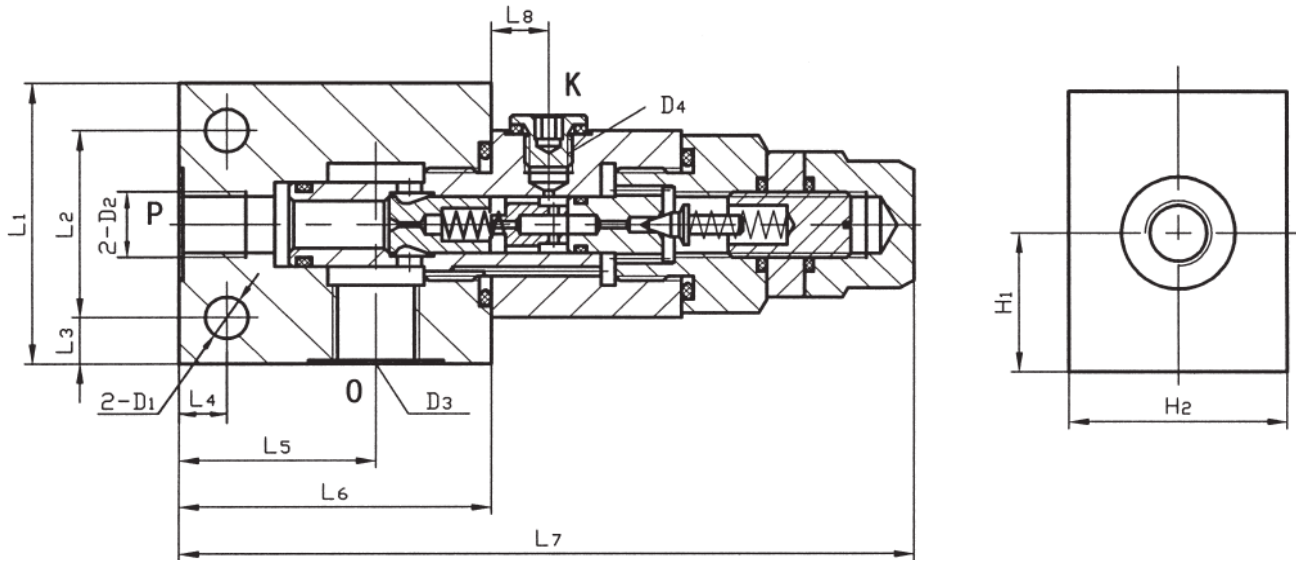

Dimensions:

Type	L1	L2	L3	L4	L5	L6	L7	L8	D1	D2	D3	D4	H1	H2
XYF-L10	60	40	10	10	41	65	154	12	Φ 9	M14x1,5	M18x1,5	M10x1	30	46
XYF-L15	65	45	10	15	48	80	186	13	Φ 9	M22x1,5	M22x1,5	M10x1	32,5	55

Thermis, spol. s r.o.
Mateří 14
614 00 Brno
Czech Republic

Tel: +420 545 226 177-184
Fax: +420 545 226 177, 181
E-mail: info@thermis.cz
www.thermis.cz

IČ: 26 88 36 43
DIČ: CZ 26 88 36 43
KOS v Brně, oddíl C, vložka 43349
Komerční banka Brno – Černá Pole

Bolev

GY16-E-1235
safety valve

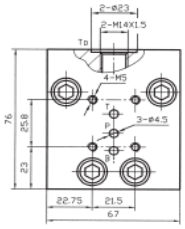

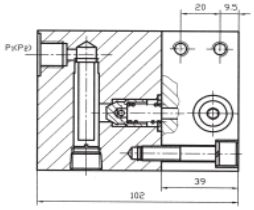

Working pressure: 21 MPA
Burst pressure: 0,07 MPa
Loss in pressure: < 0,5 MPa
Medium: Hydraulic oilj

Q84-1254
throttle valve

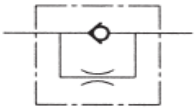

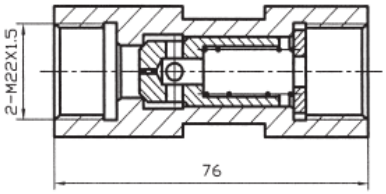

Nominal join: 12mm
Flow: 40l/min
Working pressure: 21 MPA
Medium: Hydraulic oil

DFZ2
double joint check valve

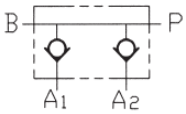

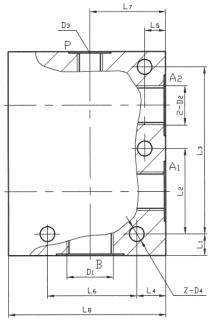

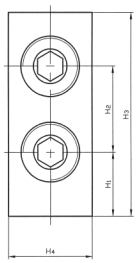

Nominal pressure: 32 MPA
Start pressure: 0,06 MPa
Medium: Hydraulic oil

DFZ3
three joint check valve

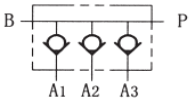

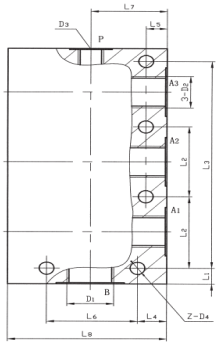

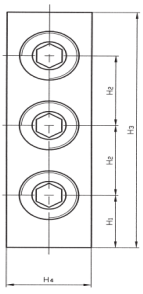

Nominal pressure: 32 MPA
Start pressure: 0,06 MPa
Medium: Hydraulic oil

SDIF-C20A
double check valve

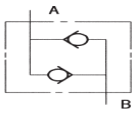

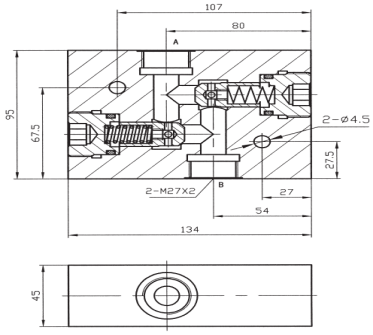

Nominal pressure: 20MPa
Start pressure: A→B 0,065 MPa
B→A 0,4MPa
Medium: Hydraulic oil

Thermis, spol. s r.o.
Mateří 14
614 00 Brno
Czech Republic

Tel: +420 545 226 177-184
Fax: +420 545 226 177, 181
E-mail: info@thermis.cz
www.thermis.cz

IČ: 26 88 36 43
DIČ: CZ 26 88 36 43
KOS v Brně, oddíl C, vložka 43349
Komerční banka Brno – Černá Pole

Bolev

QY25D-1271-2
constant flow safety valve

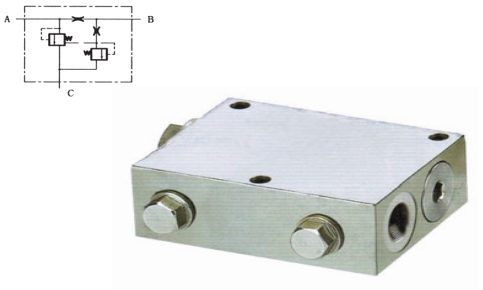

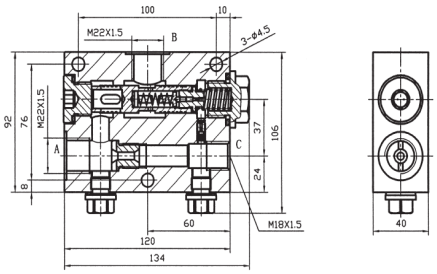

Rated pressure: 21MPa
Medium: Hydraulic oil

QY12A-1245
gyration valve group

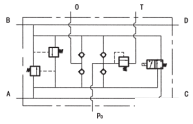

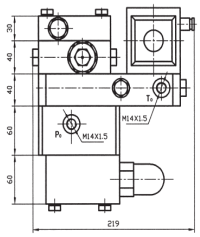

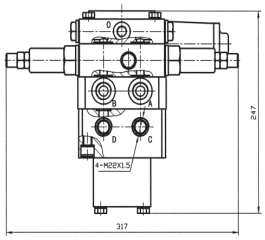

Nominal pressure: 21MPa
Buffer pressure: 14 ~18MPa
Medium: Hydraulic oil

QY20-129A
Control sequence

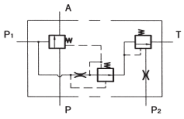

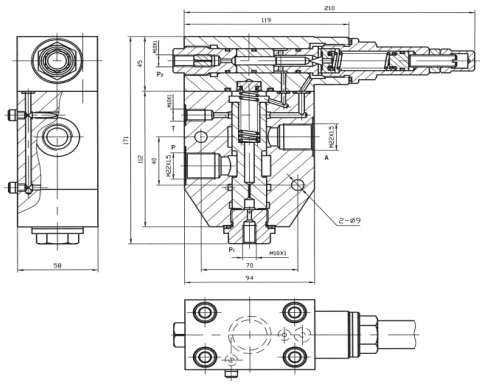

Rated pressure: 19,6 MPA
Nominal join: 15mm
Rated flow: 60l/min
Withstanding fixed pressure: 9,8MPa
Burst pressure range: 6,86~9,8MPa
Close pressure: 53~56% Burst pressure

Thermis, spol. s r.o.
Mateří 14
614 00 Brno
Czech Republic

Tel: +420 545 226 177-184
Fax: +420 545 226 177, 181
E-mail: info@thermis.cz
www.thermis.cz

IČ: 26 88 36 43
DIČ: CZ 26 88 36 43
KOS v Brně, oddíl C, vložka 43349
Komerční banka Brno – Černá Pole

Bolev

SXYF
unloading overflow valve unit

Nominal join: 10,15mm
Rated flow: 40, 63 l/min
Nominal pressure: 32 MPa
Pressure range: 3~31 MPa
Medium: Hydraulic oil

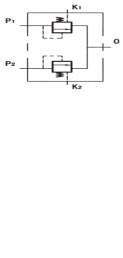

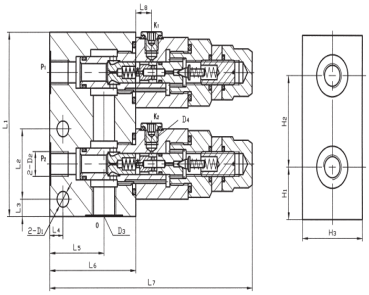

YXF-L10
unloading valve unit

Nominal join: 10mm
Nominal flow: 40l/min
Nominal pressure: 32 MPa
Medium: Hydraulic oil

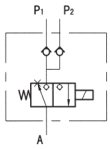

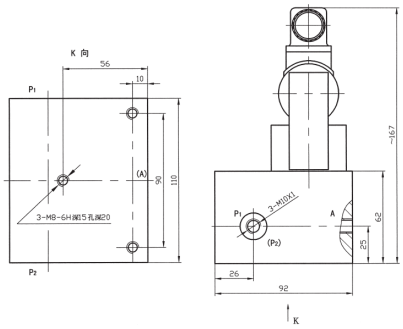

HFS10
buffer valve

Nominal join: 10mm
Nominal flow: 40l/min
Nominal pressure: 21 MPA
Adjust setting pressure: 10 MPa
Medium: Hydraulic oil

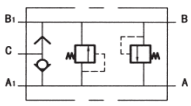

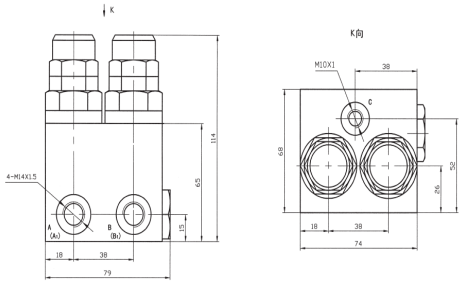

YLBJ-6
pressure alarm

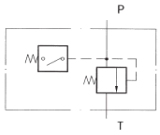

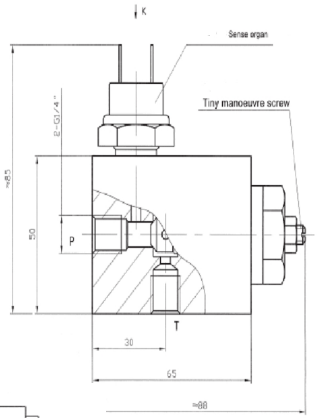

Alarm pressure: 0,20 MPA
Maximum pressure: 0,06 MPa
Power supply: 24V/DC 24V

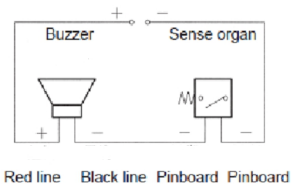

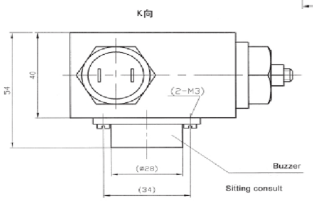

Bolev

QKF6
assembled control valve

Rated pressure: 3,5MPa
Rated flow: 18l/min
Accumulator capacity: 0,63l
Filtrate oil flow: 30l

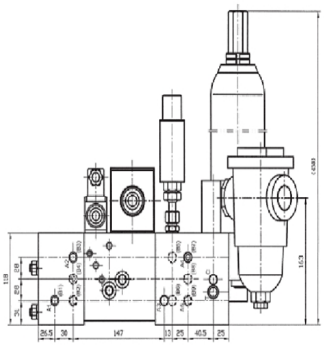

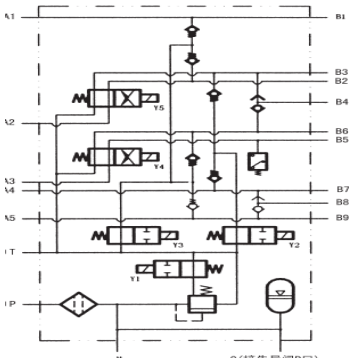

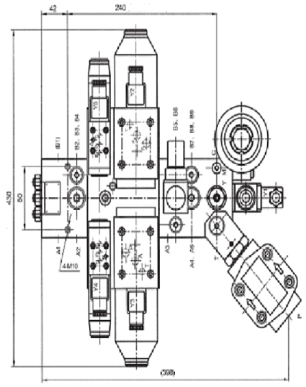

XZ
rotary joint

Nominal join: 15, 20 mm
Max. operating temperature: 120°C
Max.working pressure: 1 MPa

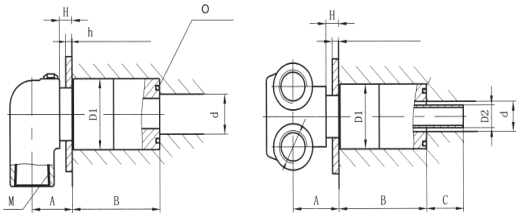

QXF-5
change valve

Nominal join: 5mm
Pressure range: 4~ 40MPa

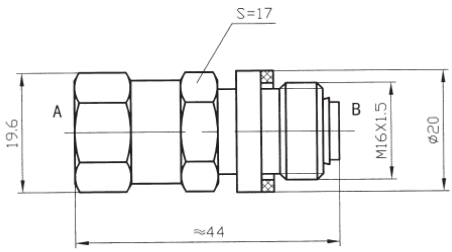

Thermis, spol. s r.o.
Mateří 14
614 00 Brno
Czech Republic

Tel: +420 545 226 177-184
Fax: +420 545 226 177, 181
E-mail: info@thermis.cz
www.thermis.cz

IČ: 26 88 36 43
DIČ: CZ 26 88 36 43
KOS v Brně, oddíl C, vložka 43349
Komerční banka Brno – Černá Pole

Bolev

YS-8H, T5106124
Oil filters

Technical parameters:

YS-8H
Nominal pressure: 32 MPa
Filtration precision: 20 µm
Nominal flow: 50 l/min
Applicable medium: hydraulic oil

T5106124
Nominal pressure: 1 MPa
Filtration precision: 20 µm
Nominal flow: 200 l/min

Symbol:

YS-8H

T5106124

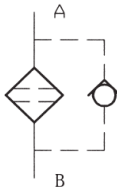

Drawings:

YS-8H

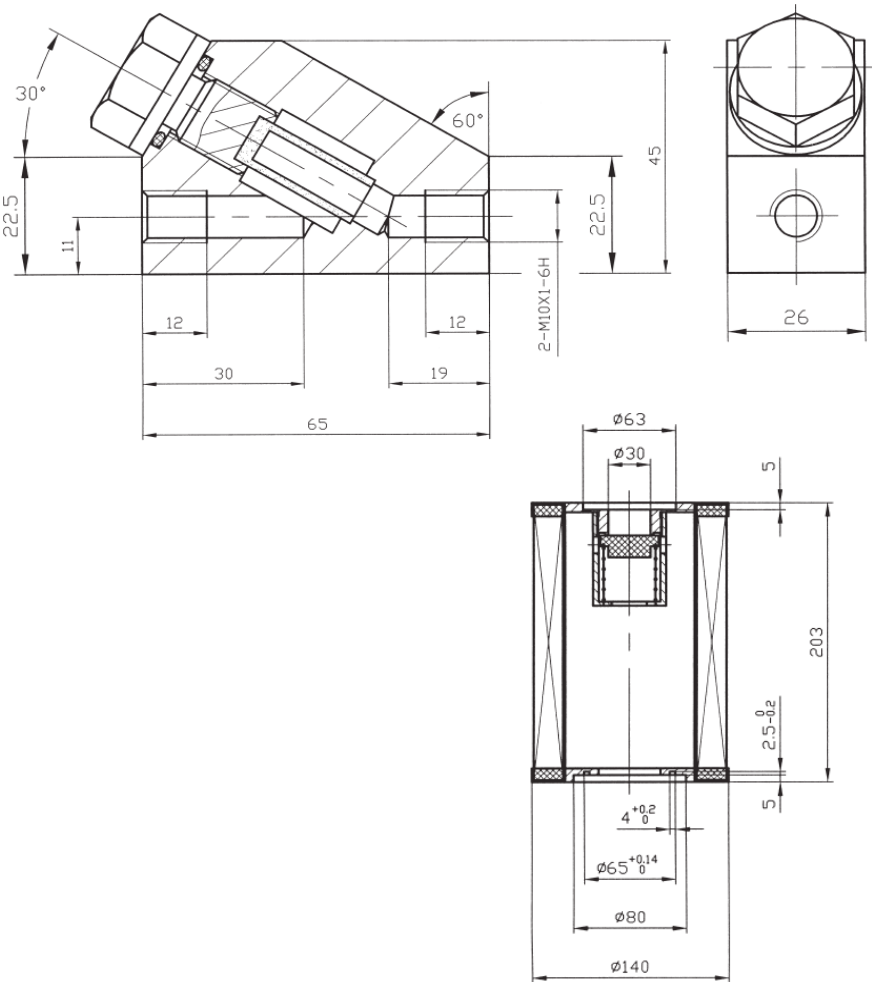

T5106124

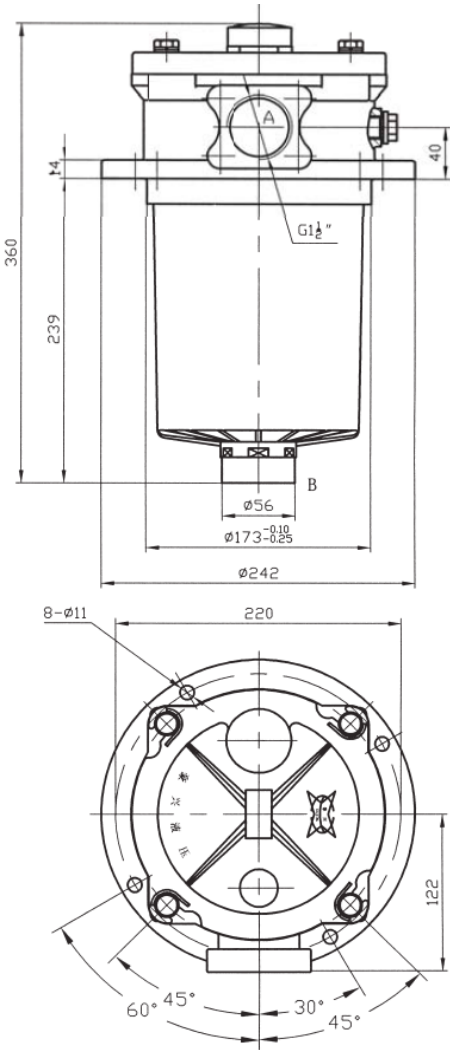

Thermis, spol. s r.o.
Mateří 14
614 00 Brno
Czech Republic

Tel: +420 545 226 177-184
Fax: +420 545 226 177, 181
E-mail: info@thermis.cz
www.thermis.cz

IČ: 26 88 36 43
DIČ: CZ 26 88 36 43
KOS v Brně, oddíl C, vložka 43349
Komerční banka Brno – Černá Pole